برق موشن
BARGH MOTION

منوال DA180A

WWW.BARGHMOTION.COM
@BARGHMOTION
0938 1234717

Operation Manual

DA180A Series
AC Servo VFD

SHENZHEN INVT ELECTRIC CO., LTD.

No.	Change description	Version	Release date
1	First release.	V1.0	February 2024

BARGH MOTION

Preface

Thanks for choosing DA180A series AC servo drive (DA180A drive for short).

DA180A drive is a new generation of servo drive that INVT develops, using the modular design. The host controller software uses USB communication and the bus control is optional among Modbus bus, CANopen bus and EtherCAT bus. Meanwhile, this product is equipped with online/offline inertia identification, gain switching, auto/manual notch filter, auto/manual vibration control filter, medium-frequency vibration suppression, and internal point-to-point (PTP) control.

DA180A drive adopts electromagnetic compatibility design to ensure strong anti-electromagnetic interference capacity while realizing low noise and weakening electromagnetic interference in the application sites.

This manual instructs you how to install, wire, set parameters for, diagnose and remove faults for, and maintain the VFD, and also lists related precautions. Before installing the product, read through this manual carefully to ensure the proper installation and running with the excellent performance and powerful functions into full play.

If the product is ultimately used for military affairs or weapon manufacture, comply with the export control regulations in the Foreign Trade Law of the People's Republic of China and complete related formalities.

The manual is subject to change without prior notice.

Safety precautions

Warning symbols

Read manual carefully and follow the directions.

务必在阅读使用说明书后，按其步骤操作！

Disconnect all power and wait 15 min,before servicing.May cause electric shock.

通电中或断电15分钟内，请勿触摸端子，有触电危险！

Don't touch heatsink,May cause burn.

请勿触摸散热片，有烫伤危险！

Contact currents up to 0.5mA,Before use must be reliable grounding

接触电流可达到0.5mA，使用前必须可靠接地！

The warning symbols are marked in the front or side of the servo drive. Users must follow these safety instructions when operating on the servo drive.

Recycling symbol:

Dispose of a scrap product separately at an appropriate

Following safety precautions should be paid attention to before any installation, configuration, operation, maintenance and inspection:

- Check whether the AC power supply is the same as the rated voltage of the servo drive, otherwise fire, hurt, damage to the drive may occur.
- Do not connect the input power cables to the output terminals, otherwise damage to the drive may occur.
- Do not carry out any insulation and voltage withstand test to the drive directly, and do not test the control circuit of the drive by megameter.
- Connect the drive and motor as correct phase sequence, otherwise drive fault or damage may occur.

برق موشن
BARGH MOTION

- De-couple the motor load and run the motor independently before operation to avoid accidents.
- Please ensure the drive can be disconnected from the power supply by E-switch before any operation.
- Set the corresponding parameters before operation, otherwise the drive may run abnormally or beyond the expectation because of the load.
- Only qualified electrical engineers can carry out the wiring, otherwise electric shock or fire may occur.
- Do not touch the conductive parts directly; do not connect any external cables (especially those related to electricity) to the enclosure or short connect the external cables, otherwise electric shock or short circuit may occur.
- Rewire the drive after 15 minutes when disconnecting the power supply, otherwise electric shock may occur.
- Do ground with proper techniques because the touch current may be 0.5mA, otherwise electric shock may occur.
- Do not touch the heat sink and external braking resistor during operation, otherwise burning may occur for the hot sides.
- Do install the overcurrent protector, leakage current protector and emergency device and ensure the normal usage after wiring, otherwise electric shock, hurt and fire may occur.
- The leakage current may exceed 2mA during the drive running. Do ground with proper techniques and ensure the grounding resistor is less than 10Ω. The conductivity of PE earth conductor is the same as the phase conductor (with the same cross area).
- Dispose of a scrap drive as industrial waste.

Contents

Preface ..... **i**
Safety precautions ..... **ii**
Contents ..... **iv**
1 Product overview **1**
1.1 Servo drive 1
1.2 Servo motor 6
1.3 Cables 8
1.4 Braking resistor specifications 10
2 Installation instruction **11**
2.1 Drive dimension 11
2.2 Drive installation 12
2.3 Motor dimension 13
2.4 Motor Installation 16
2.5 Technical parameters of servo motor 16
3 Wiring instruction **18**
3.1 System wiring 18
3.2 Main circuit (1PH 220V) terminal wiring 21
3.3 Motor power cable wiring 21
3.4 Motor and encoder cable wiring 22
3.5 Control I/O-CN1 terminal layout 23
3.6 Encoder CN2 terminal wiring 24
3.7 485/CAN-CN3 terminal 24
3.8 USB-CN4 terminal 25
4 Control mode application **26**
4.1 Standard wiring of position mode 26
4.2 Standard wiring of speed mode 27
4.3 Standard wiring of torque mode 28
4.4 CN1 function instruction 29
4.5 CN1 wiring instruction 45
5 Operation and running **51**
5.1 Running 51
5.2 Display and operation 61
6 Function codes **68**
6.1 Basic control (P0 group parameters) 68
6.2 Autotuning control (P1 group parameters) 95
6.3 Motor control parameters (P2 group) 103
6.4 I/O management parameters (P3 group) 117

برق بورش
BARGH MOTION

6.5 Extension and application (P4 group) 135
6.6 Program jog, homing, and PTP control (P5 group) 154
6.7 Application functions (P6 group) 168
6.8 PTP control (PtP0, PtP1, and PtP2 group) 173
6.9 State monitoring 176
7 Commissioning 193
7.1 Operation instruction of inertia identification 193
7.2 General methods for adjusting parameters 194
7.3 Mechanical resonance suppressing 200
7.4 Gain switching function 201
8 Communication 205
8.1 Overview 205
8.2 RS485 communication protocol 205
8.3 CANopen communication protocol 210
9 Faults and solutions 217
9.1 Drive faults and solutions 217
9.2 CANopen communication faults and solutions 233
10 Appendix 236
10.1 Setup parameter list 236
10.2 Monitoring parameter list 274
10.3 Common monitoring parameters 278
10.4 Fault codes 279
10.5 Record table of parameter setting 285

1 Product overview

1.1 Servo drive

1.1.1 Overview

DA180A series servo drive (400W/1kW)				
Specifications			**Description**	
Power supply	System input voltage of 220V		1PH, AC 220V(±15%), 47–63Hz	
Port	Control signal	Input	10 inputs (The function is configurable through parameter settings.) (7 inputs for EtherCAT models.)	
		Output	2/4 differential outputs (The function is configurable through parameter settings.)	
	Analog	Input	Two 12bit analog inputs (None for EtherCAT models.)	
	Pulse signal	Input	Two groups (mode: open collector input or differential input)	
		Output	One group differential output (A+, A-; B+, B-; Z+, Z-) One group open collector output (A, B, Z)	
	Encoder	Input	2/4-PPR absolute encoder interface	
	Communication	USB	1:1 communication upper PC software	
		RS485	1:n communication (optional)	
		CANopen	1:n communication (optional)	
		EtherCAT	1:n communication (optional)	
Control mode			1 Position control; 2 Speed control; 3 Torque control; 4 Position/Speed mode switching; 5 Speed/Torque mode switching; 6 Position/Torque mode switching; 7 CANopen mode; 8 EtherCAT mode	
Function	Position control	Control input	1. Retention pulse clearing; 2. Command pulse input disabled; 3. Electronic gear ratio switching; 4. Vibration control switching, etc	
		Control output	Positioning completion output, etc	
		Pulse input	Max. pulse input frequency	Optical coupling: differential input 4Mpps, open collector input 200kpps;

DA180A series servo drive (400W/1kW)				
Specifications			Description	
			Pulse input mode	1. Pulse + direction; 2. CW+CCW; 3. Quadrature
			Electronic gear (e-gear)	1/10000–1000 times
			Filter	1. Command smoothing filter; 2. FIR filter
		Analog input	Torque limit command input	Can independently perform clockwise/counterclockwise torque limit
		Vibration control	Able to suppress 1–200Hz front-end vibration and overall machine vibration	
		Pulse output	1. Can perform arbitrary frequency division settings under the encoder resolution; 2. B phase reverse function	
	Speed control	Control input	1. Internal command speed 1; 2. Internal command speed 2; 3. Internal command speed 3; 4. Zero speed clamp, etc.	
		Control output	Speed reaching, etc	
		Analog input	Speed command input	The speed command input can be set according to the analog voltage DC ± 10V
			Torque limit input	Can independently perform clockwise/counterclockwise torque limit
		Internal speed commands	8 step speed can be switched according to the external control input	
		ACC/DEC adjustment of speed command	ACC/DEC time setting and S curve setting	
		Zero-speed clamp	In the speed mode, it can set the operation mode as the speed mode and position mode	

DA180A series servo drive (400W/1kW)				
Specifications			**Description**	
		Speed command filter	A delay filter of analog input speed command	
		Speed command zero drift control	Zero drift control against outside interference	
	Torque control	Control input	Zero speed clamp input, etc	
		Control output	Speed reaching, etc	
		Analog input	Torque command input	Analog torque command input, gain and polarity can be set based on analog voltage
			Speed limit input	Analog speed limit
		Speed limit	Set the speed limit by parameters	
		Torque command filter	A delay filter of analog input torque command	
		Torque command zero drift control	Zero drift control against outside interference	
	Internal position plan	Plan bits	128 bits internal position planning, the positioning can be controlled through communication	
		Route setting	1. Position; 2. Speed; 3. ACC time; 4. DEC time; 5. Stop timer; 6. Various state output; 7. Operational mode	
		Homing	1. LS signal; 2. Z phase signal; 3. LS signal+Z phase signal; 4. Torque limit signal	
Protection	Protection function		Such as protection against phase-loss, overvoltage, undervoltage, overcurrent, overheating, storage fault, initialization fault, I/O distribution abnormalities and large position deviation, braking resistor overload, and drive overload.	
	Dynamic braking		For emergency stop function, including stop and fault stop scenarios. (This function is unavailable for the pulse	

DA180A series servo drive (400W/1kW)		
Specifications		**Description**
		type)
	Protection and fault record	1. Up to 10 faults can be recorded. 2. The key parameters can be recorded when fault occurs.
Environment	Working temperature	0–55°C (Derate 80% when the ambient temperature is 45–55°C.)
	Storage temperature	-20°C–70°C (No freezing)
	Operation/storage humidity	≤90%RH (no condensation)
	IP rating	IP20
	Altitude	Lower than 1000m
	Vibration	≤5.88m/s^2, 10–60Hz (Working at the resonance point is not allowed)

1.1.2 External view of the drive

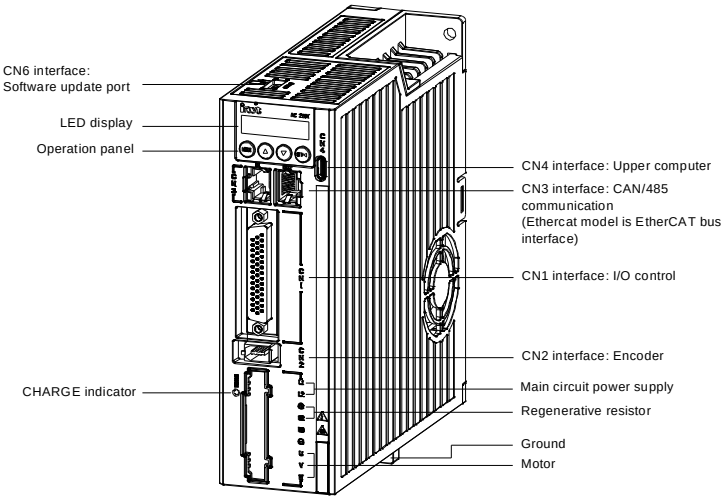

1.1.3 Drive naming

DA180A-E-2R8-S-2

① ② ③ ④ ⑤

No.	Description	Example
①	Product series	DA180A: Servo drive series
②	Product category	E: Pulse type C: CANopen bus type N: EtherCAT bus type
③	Rated output current	2R8: 2.8A 6R0: 6.0A
④	Voltage class	S: 220V
⑤	Encoder category	2: Communication encoder (Tamagawa, BISS*, EnDat*, Nikon* and others) **Note:** The encoder with an * mark is equipped as an optional configuration. For details, contact the manufacturer.

1.1.4 Drive nameplate

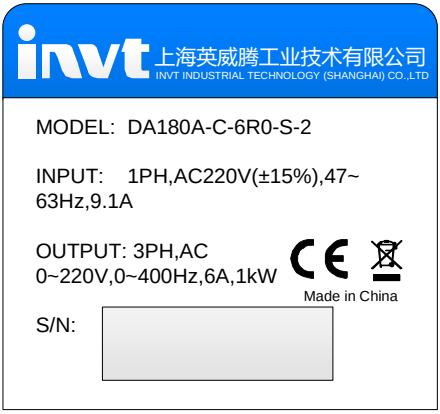

1.1.5 Power ratings and cabinet volumes

Model	Input		Output		Cabinet volume
	Voltage (V)	Rated current (A)	Power (kW)	Rated current (A)	
DA180A-E-2R8-S-2	1PH 220	3.6	0.4	2.8	A
DA180A-C-2R8-S-2		3.6	0.4	2.8	
DA180A-N-2R8-S-2		3.6	0.4	2.8	
DA180A-E-6R0-S-2		9.1	1.0	6	
DA180A-C-6R0-S-2		9.1	1.0	6	
DA180A-N-6R0-S-2		9.1	1.0	6	

1.2 Servo motor

1.2.1 Motor nameplate

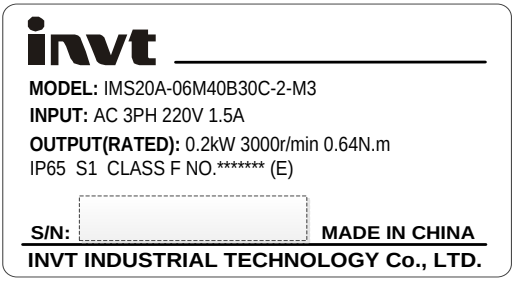

Note: "No.*******" in the nameplate is the motor model code (motor code for short). Please input this code into servo parameter P0.00 correctly (P0.00 is long parameter which can be set via keypad. See details at chapter 5.2.1 (8), otherwise, the servo system may not operate normally and major fault may occur to the drive and motor.

1.2.2 Servo motor naming

IMS20A-06 M 40B 30C-2-M3 4 * - * * * *

① ② ③ ④ ⑤ ⑥ ⑦ ⑧ ⑨ ⑩

No.	Description	Example
①	Product series	IMS: Permanent-magnet synchronous motor 20A: Product series
②	Base model no.	04: 40mm 06: 60mm 08: 80mm 10: 100mm 11: 110mm 13: 130mm
③	Inertial class	L: General-purpose servo motor with small inertia M: General-purpose servo motor with medium inertia H: General-purpose servo motor with high inertia
④	Rated power	A: x1 B: x10 C: x100 D: x1000 For example: 50A-50W, 40B-0.4kW, 10C-1kW, 15D-15kW

No.	Description	Example
⑤	Rated rotation speed	A: x1 B: x10 C: x100 D: x1000 E: x10000 For example: 30C-3000rpm/min
⑥	Voltage class	1: 110VAC 2: 220VAC 3: 300VAC 4: 380VAC 24: 24VDC 36: 36VDC 48: 48VDC
⑦	Encoder type	N: No encoder P: Photoelectric encoder M: Magnetic encoder R: Rotary encoder S: Sin/Cos encoder General-purpose: 1: Incremental type (2500-PPR) 2: Economical type (2500-PPR) 7: Resolution: 12 bits 8: Resolution: 16 bits Comply with Tamagawa protocols: 3: Single-turn absolute (17 bits) 4: Multi-turn absolute (17 bits) 9: Multi-turn absolute (23 bits) Comply with Nikon protocols: 5: Single-turn absolute (20 bits) 6: Multi-turn absolute (20 bits)
⑧	Oil seal and brake	0: With oil seal but no brake (Empty by default) 1: Without oil seal or brake 2: With oil seal and permanent magnet brake 3: Without oil seal but with permanent magnet brake 4: With oil seal and electromagnetic brake 5: Without oil seal but with electromagnetic brake

No.	Description	Example
⑨	Cooling method	N: Natural cooling (Empty by default) F: Forced air cooling Y: Oil cooling W: Water cooling
⑩	Product lot number	Manufacturer lot number

1.3 Cables

1.3.1 Cable nameplate

1.3.2 Model designation of power cable

DAML-050-03-AF0-00
① ② ③ ④ ⑤⑥⑦ ⑧

No.	Description	Example
①	Product series	For internal use by manufacturer
②	Power cable	ML: Power cable
③	Cable diameter	050: 0.5mm^2 100: 1.0mm^2
④	Cable length	03: 3m 05: 5m 10: 10m 15: 15m …
⑤	Plug on motor end	A: 4PIN plastic plug B: 4PIN regular aviation plug YD28
⑥	Plug on drive end	F: Tubular terminal

No.	Description	Example
⑦	Cable material	0: Regular cable F: Flexible towline cable
⑧	Serial no.	00: Standard part 01: Serial no. for non-standard parts …

1.3.3 Model designation of power cable fittings

DAML-AF
① ② ⑤ ⑥

No.	Description	Example
①	Product series	For internal use by manufacturer
②	Power cable	ML: Power cable
⑤	Plug on motor end	A: 4PIN plastic plug B: 4PIN regular aviation plug YD28
⑥	Plug on drive end	F: Tubular terminal

1.3.4 Model designation of encoder cable

DBEL-04-03-DI0-04A0
① ② ③ ④ ⑤⑥⑦ ⑧ ⑨

No.	Description	Example
①	Product series	For internal use by manufacturer
②	Encoder cable	EL: Encoder cable
③	Number of wires	04: 4-core cable 06: 6-core cable (with battery)
④	Cable length	03: 3m 05: 5m 10: 10m 15: 15m …
⑤	Plug on motor end	B: 15PIN regular aviation plug YD28 D: 9PIN plastic plug
⑥	Plug on drive end	I: 1394 6PIN male
⑦	Cable material	0: Regular cable F: Flexible towline cable
⑧	Encoder type	04: Absolute
⑨	Serial no.	00: Standard part

No.	Description	Example
		01: Serial no. for non-standard parts …

1.3.5 Model designation of encoder cable fittings

DBEL-DI

① ② ⑤⑥

No.	Description	Example
①	Product series	For internal use by manufacturer
②	Encoder cable	EL: Encoder cable
⑤	Plug on motor end	B: 15PIN regular aviation plug YD28 D: 9PIN plastic plug
⑥	Plug on drive end	I: 1394 6PIN male

1.3.6 Model designation of motor braking cables

BRKL-03-A

① ② ③

No.	Description	Example
①	Product series	BRKL: Motor braking cable
②	Cable length	03: 3m 05: 5m 10: 10m 30: 30m
③	Plug on motor end	A: 2PIN metal plug B: 3PIN regular aviation plug C: 3PIN metal plug

1.4 Braking resistor specifications

Drive model	Embedded braking resistor	Min. resistance of external braking resistors
DA180A-E-2R8-S-2	/	60Ω
DA180A-C-2R8-S-2	/	60Ω
DA180A-N-2R8-S-2	/	60Ω
DA180A-E-6R0-S-2	45Ω 60W	45Ω
DA180A-C-6R0-S-2	45Ω 60W	45Ω
DA180A-N-6R0-S-2	45Ω 60W	45Ω

2 Installation instruction

2.1 Drive dimension

2.1.1 A/B/C size and dimension diagram

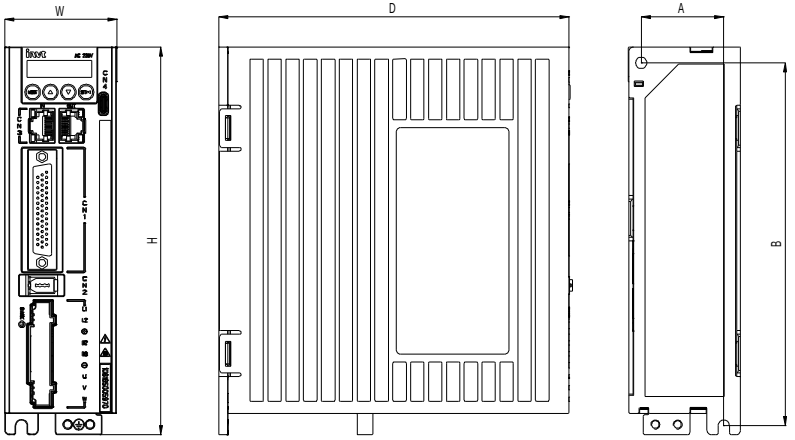

2.1.2 Detailed dimension table

Volume	Model	Outline dimensions			Installation dimensions		Mounting hole diameter (mm)
		H (mm)	W (mm)	D (mm)	A (mm)	B (mm)	
A	DA180A-E-2R8-S-2	172	50	157	37	161	M4(Ø5)
	DA180A-C-2R8-S-2						
	DA180A-N-2R8-S-2						
	DA180A-E-6R0-S-2						
	DA180A-C-6R0-S-2						
	DA180A-N-6R0-S-2						

2.2 Drive installation

2.2.1 Installation mode

The base installation method is as follows.

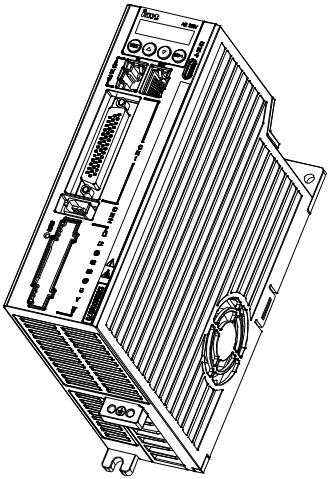

Note: There is a Ø5 installation hole at the lower left corner and upper right corner of the rear board respectively.

2.2.2 Installation space and direction

Please install the servo drive vertically and keep enough installation space for good ventilation. Install fans if necessary to ensure the temperature inside the control cabinet is lower than 45°C.

1. Single-unit installation:

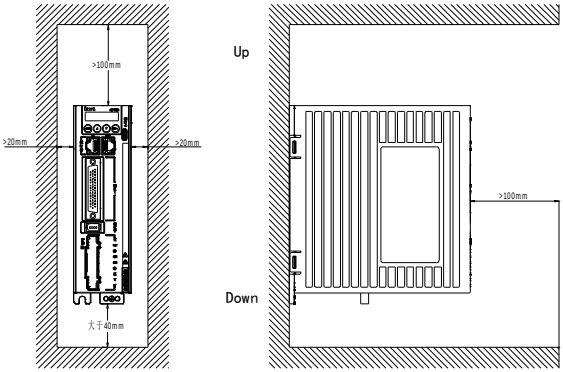

2. Multiple-unit installation:

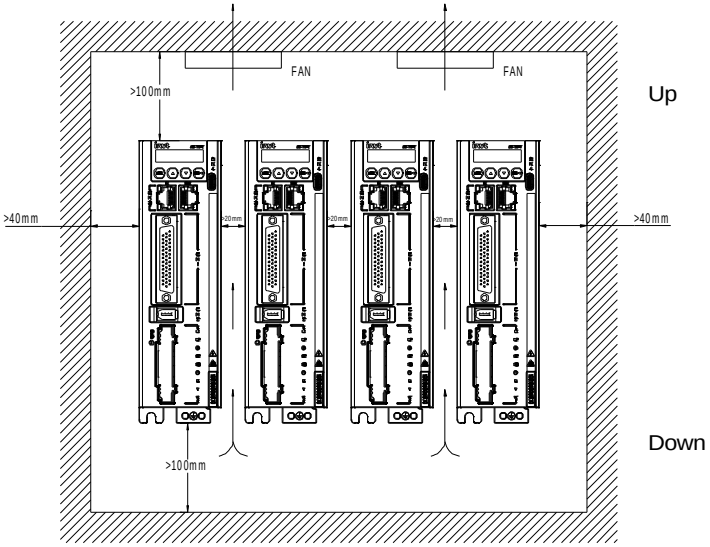

2.3 Motor dimension

Note: As motor structure and dimension may vary slightly with design modification, for those who have demanding requirements for the installation length of motor, please confirm the installation length with us before ordering.

2.3.1 Outline and installation dimension for 40-base motor (mm)

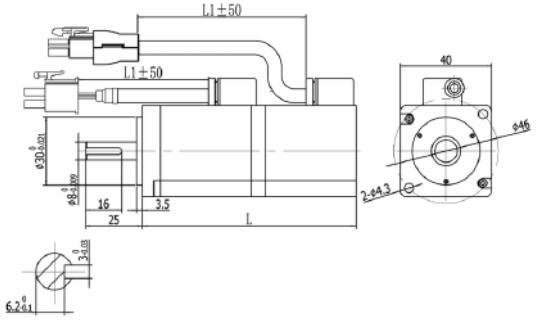

Model	Dimension L (mm)	Dimension L1 (mm)
IMS20A-04L10B30C-2-M3-C	85	600
IMS20A-04L10B30C-2-M34-C	124	600

Model	Dimension L (mm)	Dimension L1 (mm)
IMS20A-04L10B30C-2-P9-C	85	600
IMS20A-04L10B30C-2-P94-C	124	600

2.3.2 Outline and installation dimension for 60-base motor (mm)

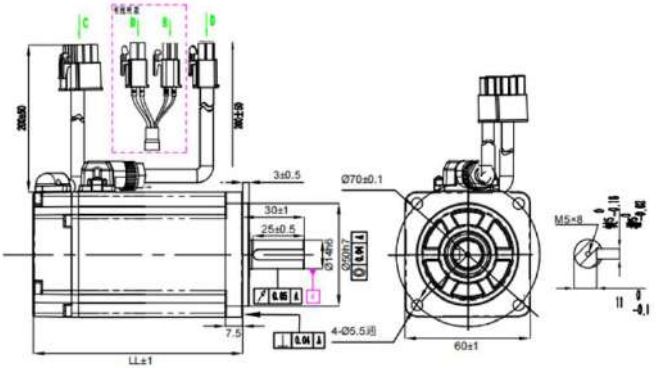

Motor model	LL (mm)
IMS20A-06M20B30C-2-P9-E	77
IMS20A-06M20B30C-2-P94-E	115
IMS20A-06M20B30C-2-M3-E	77
IMS20A-06M20B30C-2-M34-E	115
IMS20A-06M40B30C-2-P9-E	96
IMS20A-06M40B30C-2-P94-E	134
IMS20A-06M40B30C-2-M3-E	96
IMS20A-06M40B30C-2-M34-E	134

2.3.3 Outline and installation dimension for 80-base motor (mm)

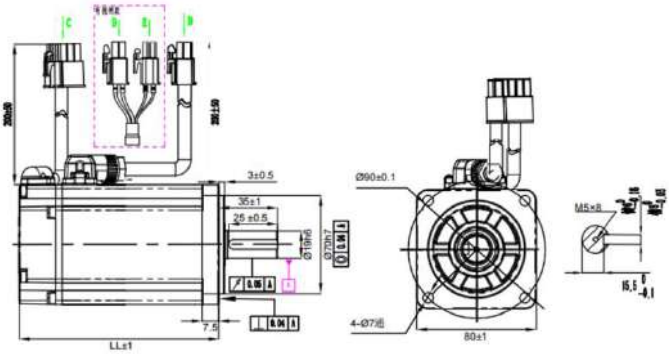

Motor model	LL (mm)
IMS20A-08M10C25C-2-P9-E	120
IMS20A-08M10C25C-2-P94-E	160
IMS20A-08M10C25C-2-M3-E	120
IMS20A-08M10C25C-2-M34-E	160
IMS20A-08M75B30C-2-P9-E	106
IMS20A-08M75B30C-2-P94-E	145
IMS20A-08M75B30C-2-M3-E	106
IMS20A-08M75B30C-2-M34-E	145

2.3.4 Outline and installation dimension for 130-base motor (mm)

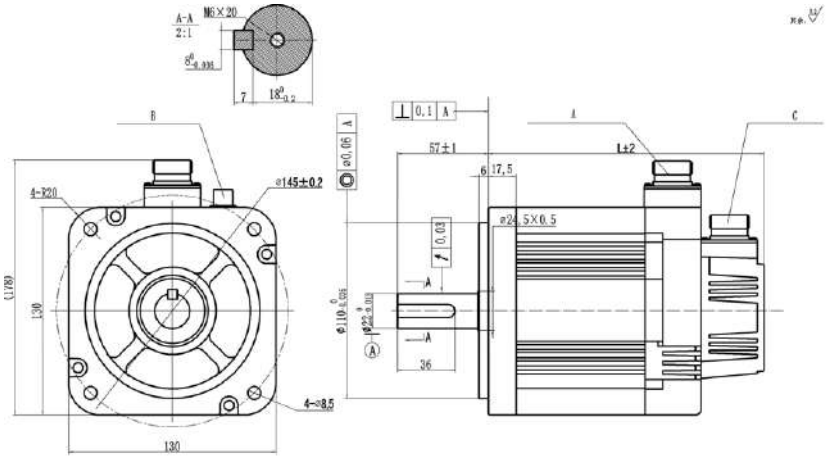

Motor model	L(mm)
IMS20A-13H85B15C-2-M3-C	153
IMS20A-13H85B15C-2-M34-C	176
IMS20A-13H85B15C-2-P9-C	153
IMS20A-13H85B15C-2-P94-C	176

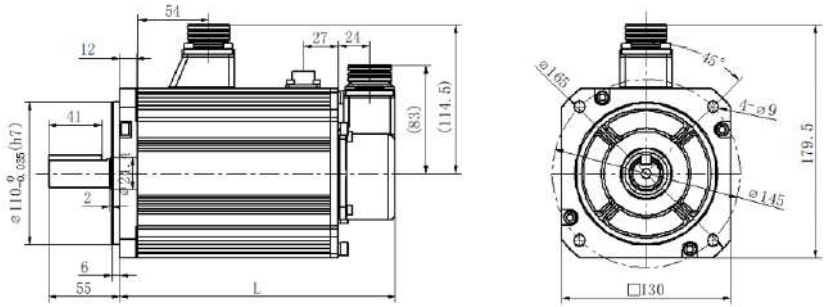

Motor model	L(mm)
IMS20A-13M10C20C-2-M3-A	143
IMS20A-13M10C20C-2-M34-A	185
IMS20A-13M10C20C-2-P9-A	143
IMS20A-13M10C20C-2-P94-A	185

2.4 Motor Installation

- Do not pull the motor leads or output shaft during fetching and moving the motor;
- Do not beat or hammer during the motor assembly to avoid damage to the encoder or shafts;
- Please wipe the slushing oil on the motor shaft before using.

2.5 Technical parameters of servo motor

2.5.1 Motor specifications

Motor model	Rated power (kW)	Rated current (A)	Max. transient current (A)	Rated torque (Nm)	Max. transient torque (Nm)	Rated speed (rpm)	Max. speed (rpm)	Rotation inertia Standard/with brake (kg·cm²)	Voltage (V)	Weight Standard/ with brake (kg)
IMS20A-04L10B30C-2-***	0.1	1.8	6.6	0.3	1.1	3000	6000	0.665/0.667	220	0.54/0.72
IMS20A-06M20B30C-2-***	0.2	1.8	5.4	0.64	1.92	3000	6000	0.32/0.37	220	0.9/1.2
IMS20A-06M40B30C-2-***	0.4	3	9	1.27	3.82	3000	6000	0.68/0.73	220	1.15/1.75
IMS20A-08M75B30C-2-***	0.75	4.8	14.4	2.4	7.2	3000	5500	1.72/1.77	220	2/3
IMS20A-08M10C25C-2-***	1	4.8	14.4	3.8	11.4	2500	3000	2.15/2.4	220	2.71/3.36

Motor model	Rated power (kW)	Rated current (A)	Max. transient current (A)	Rated torque (Nm)	Max. transient torque (Nm)	Rated speed (rpm)	Max. speed (rpm)	Rotation inertia Standard/with brake (kg·cm²)	Voltage (V)	Weight Standard/ with brake (kg)
IMS20A-13H85B15C-2-***	0.85	6	18	5.4	16.2	1500	3000	13.88/15.78	220	5.6/6.9
IMS20A-13M10C20C-2-***	1	4.8	14.4	4.78	14.3	2000	2750	6.387/8.287	220	5.8/7.5
Insulation class	Class F (155°C)									
Ingress protection (IP) rating	IP65									
Running environment	Temperature: -10°C–+40°C (non-frozen)									

3 Wiring instruction

3.1 System wiring

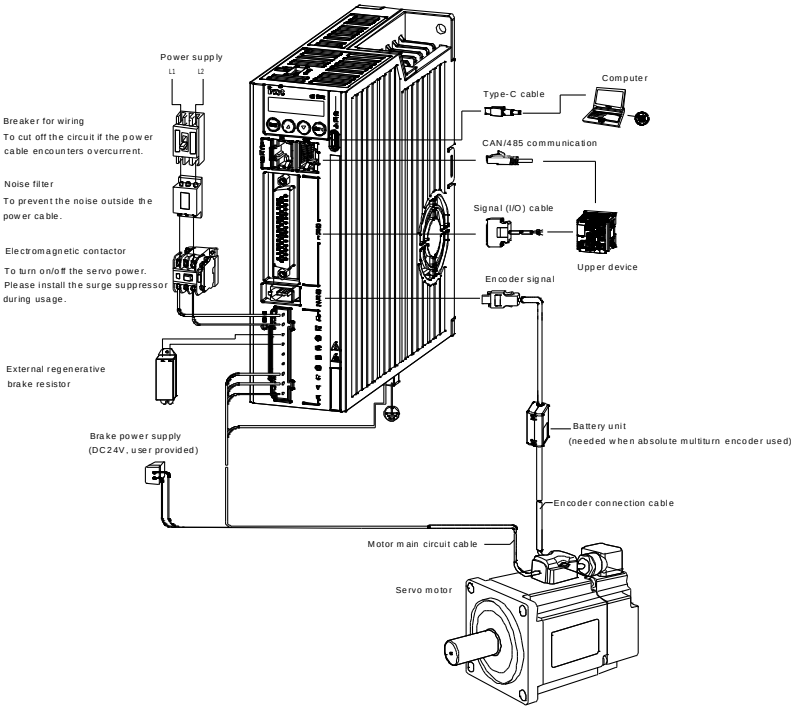

Note:

- Please make sure that the the power supply of the power grid is consistent with the input power specification indicated on the nameplate before turning on the input power supply of the drive.
- The electromagnetic contactor is used to connect and disconnect the power supply of the main circuit of the servo drive. Do not use it to start/stop the servo drive.
- If it is necessary to connect an external regenerative brake resistor, the jumper between B2 and B3 shall be removed. For details, see section 3.2 Main circuit (1PH 220V) terminal wiring. The external regenerative brake resistor must be installed on flame-resistance material which has good cooling effect, such as metal.

3.1.1 Input power cable requirements

The sizes of the input power cables must comply with local regulations.

- The input power cables must be able to carry the corresponding load currents.
- The maximum temperature margin of the input power cables in continuous operation cannot be lower than 70°C.
- The conductivity of the PE grounding conductor is the same as that of the phase conductor, that is, the cross-sectional areas are the same.
- For details about the EMC requirements, see IEC/EN 61800-3:2004.

It is recommended to use shielded four-core cables for input cables.

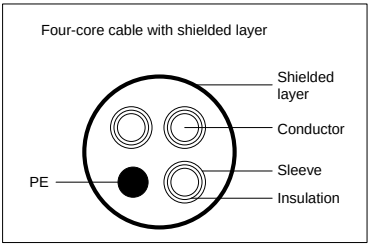

To protect the conductors, the cross-sectional area of the shielded cables must be the same as that of the phase conductors if the cable and conductor are made of materials of the same type. This reduces grounding resistance, and thus improves impedance continuity.

To effectively restrict the emission and conduction of radio frequency (RF) interference, the conductivity of the shielded cable must at least be 1/10 of the conductivity of the phase conductor. The coverage rate of shielded layer must be above 85% at least.

3.1.2 Control cable requirements

All analog control cables and cables used for frequency input must be shielded cables. Analog signal cables need to be double-shielded twisted-pair cables (as shown in figure a). Use one separate shielded twisted pair for each signal. Do not use the same ground wire for different analog signals.

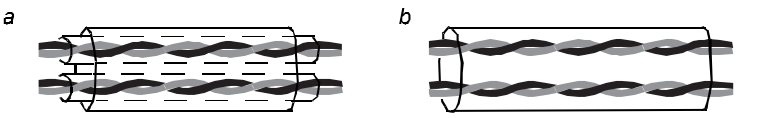

Multiple double-shielded twisted pairs **Multiple single-shielded twisted pairs**

For low-voltage digital signals, double-shielded cables are recommended, but shielded or unshielded twisted pairs (as shown in figure b) also can be used. For pulse input signals, however, only shielded cables can be used.

A shielded twisted-pair cable must be used for a communication cable.

3.1.3 Cable diameter table of main circuit

Small power range (100W–1kW)								
Drive model	Recommended cable size (mm^2)			Connectable cable size (mm^2)			Terminal screw	Fastening torque (Nm)
	L1/L2/L3 UVW	PE	L1C/L2C	L1/L2/L3 UVW	(+), B2, B3, (-)	PE		
DA180A-E-2R8-S-2	0.5	0.5	0.5	0.5–4	0.5–4	0.5–4	M2.5	0.3–0.6
DA180A-C-2R8-S-2								
DA180A-N-2R8-S-2								
DA180A-E-6R0-S-2	1	1	0.5	1–4	1–4	1–4	M2.5	0.3–0.6
DA180A-C-6R0-S-2								
DA180A-N-6R0-S-2								

3.1.4 EMI filter model selection

Drive model	EMI filter model
DA180A-E-2R8-S-2	FLT-PS2010H-B
DA180A-C-2R8-S-2	
DA180A-N-2R8-S-2	
DA180A-E-6R0-S-2	
DA180A-C-6R0-S-2	
DA180A-N-6R0-S-2	

Note: The EMI filter models in the table are the models of our company and they are used for power input terminal.

3.2 Main circuit (1PH 220V) terminal wiring

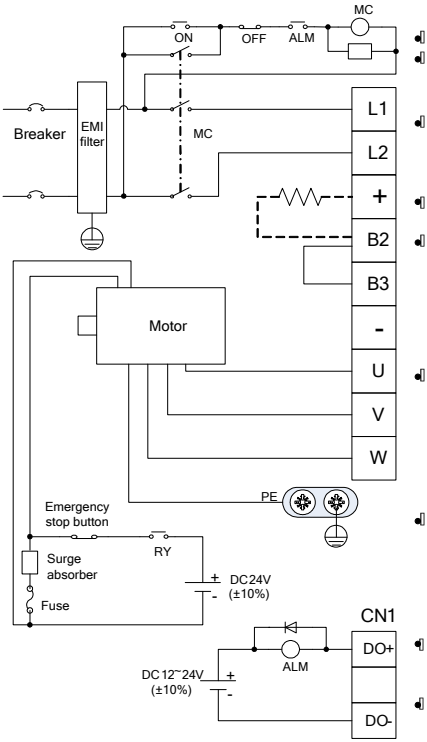

- The user is required to make this emergency stop protection circuit.
- Add surge absorbing devices on both ends of the electromagnetic contactor winding.
- The power input voltage range: AC220V(±15%)
- Do not disconnect the short connection cable between B2 and B3, unless external regenerative brake resistor is used.
- When external regenerative brake resistor is used, disconnect the short connection cable between B2 and B3 and make connection based on the dotted lines in the diagram.
- Connect output U, V and W to the drive according to the motor cable phase sequence of servo motor, wrong phase sequence will cause drive fault
- Be sure to ground the servo drive to avoid accident of electrical shock.
- The electromagnetic brake uses 24V DC power supply which should be provided by the user. Moreover, it must be isolated from the DC12-24V power supply which is used by the control signal.
- Pay attention to the connection of the freewheeling diode. Reversed polarity may damage the drive.

3.3 Motor power cable wiring

3.3.1 60/80-base 200W–750W motor power cable

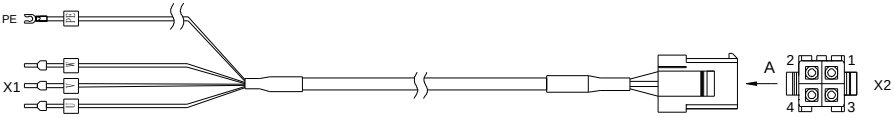

Wiring mapping			
Definition	**X1**	**X2**	**Core wire color**
U	Tubular terminal	X2.2	Yellow
V	Tubular terminal	X2.1	Green
W	Tubular terminal	X2.3	Red
PE	Grounding terminal	X2.4	Yellow/green

3.3.2 130-base 1kW (220V) motor power cable

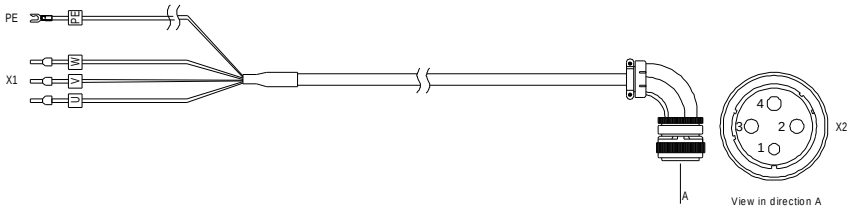

Wiring mapping			
Definition	**X1**	**X2**	**Core wire color**
U	Tubular terminal	X2.2	Yellow
V	Tubular terminal	X2.3	Green
W	Tubular terminal	X2.4	Red
PE	Grounding terminal	X2.1	Yellow/green

3.4 Motor and encoder cable wiring

3.4.117-bit and 23-bit 60, 80 base encoder cable

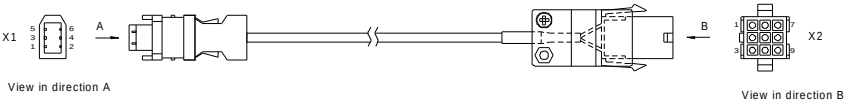

Wiring mapping			
Signal	**X1**	**X2**	**Core wire color**
SD+	X1.5	X2.1	Twisted pair
SD-	X1.6	X2.2	
5V	X1.1	X2.6	Twisted pair
GND	X1.2	X2.7	
VB-3.6V	-	X2.3	Twisted pair
VB-GND	-	X2.8	
PE	Iron shell	X2.9	Woven

3.4.2 17-bit and 23-bit 110, 130 base encoder cable

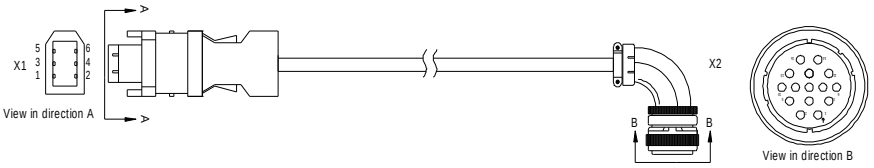

Wiring mapping			
Signal	**X1**	**X2**	**Core wire color**
SD+	X1.5	X2.2	Twisted pair
SD-	X1.6	X2.3	
5V	X1.1	X2.4	Twisted pair
GND	X1.2	X2.5	
VB-3.6V	-	X2.6	Twisted pair
VB-GND	-	X2.7	
PE	Iron shell	X2.1	Woven

3.5 Control I/O-CN1 terminal layout

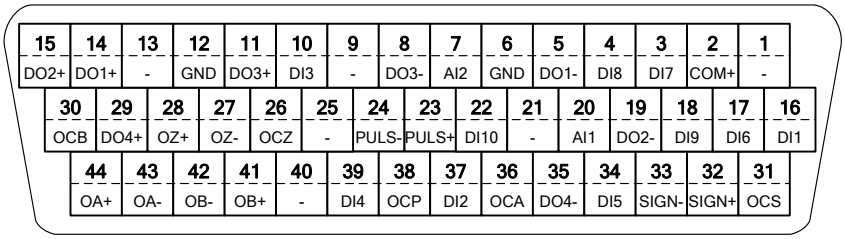

CN1 plug pins and signal codes

EtherCAT bus-type interface:

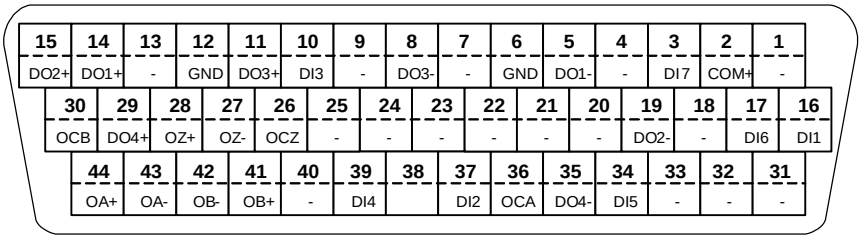

Note: For details about the terminal functions and applications,see Chapter 4 Control mode application.

3.6 Encoder CN2 terminal wiring

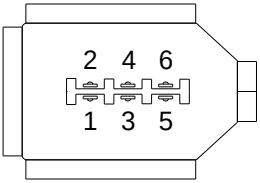

CN2 port function			
Pin	**Name**	**Function**	**Remarks**
1	5V	5V power supply	Different encoders use different cables
2	GND	Power ground	
3	CLK+	BISS Endat clock output+	
4	CLK-	BISS Endat clock output-	
5	SD+	Serial encoder data+	
6	SD-	Serial encoder data-	

3.7 485/CAN-CN3 terminal

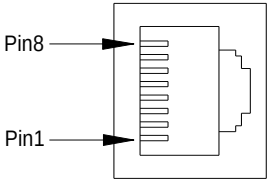

CN3 port function			
Pin	**Name**	**Function**	**Remarks**
1	CAN_H	CAN data +	485 and CAN use the same interface and each signal has two pins for multiple networking.
2	CAN_L	CAN data -	
3	CAN_GND	CAN signal ground	
4	RS485+	RS485 data +	
5	RS485-	RS485 data -	
8	GND	RS485 GND	
6, 7	-	Unused	

Note: EtherCAT bus-type drive, this port is standard network cable port definition, namely pin 1, 2, 3 and 6 correspond to Tx+, Tx-, Rx+ and Rx- respectively.

3.8 USB-CN4 terminal

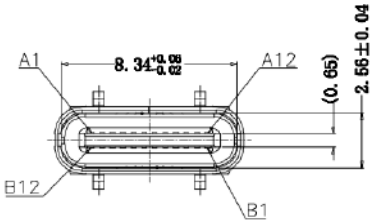

CN4 USB port function table			
Pin	**Name**	**Function**	**Remarks**
A7, B7	USB-	Data-	Standard type-c interface
A6, B6	USB+	Data+	
A1, A12, B1, B12	GND	Signal ground	
A4, B4, A5, B5, A9, B9	-	Unused	

Note: The Type-C cable with the shield layer is needed.

4 Control mode application

4.1 Standard wiring of position mode

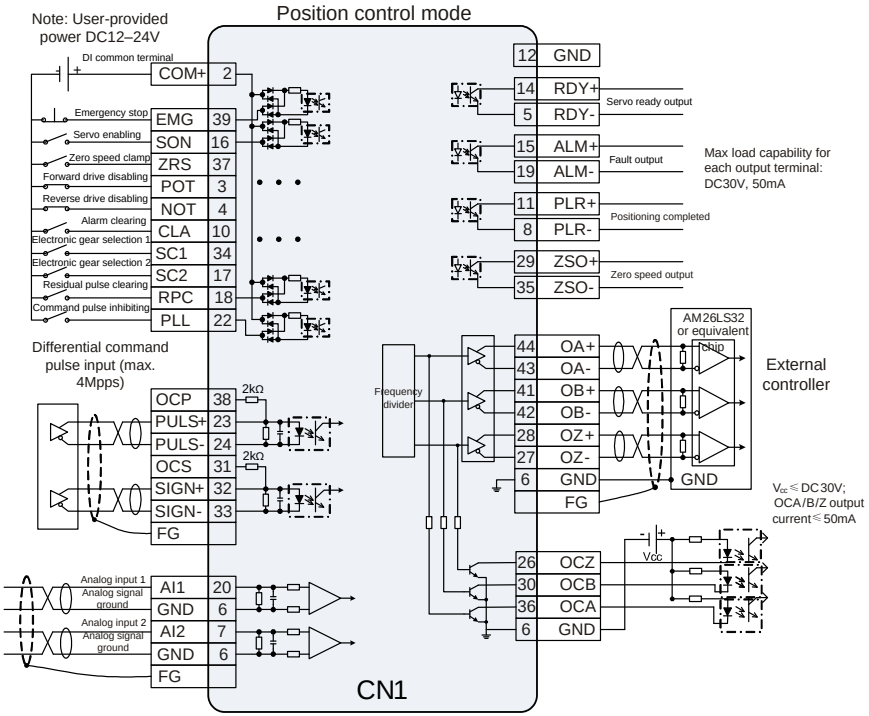

Note:

1. ( ) is shielded twisted cable.
2. ( ) is user-provided power.
3. ( ) is GND, corresponding to pin 6/12.

4.2 Standard wiring of speed mode

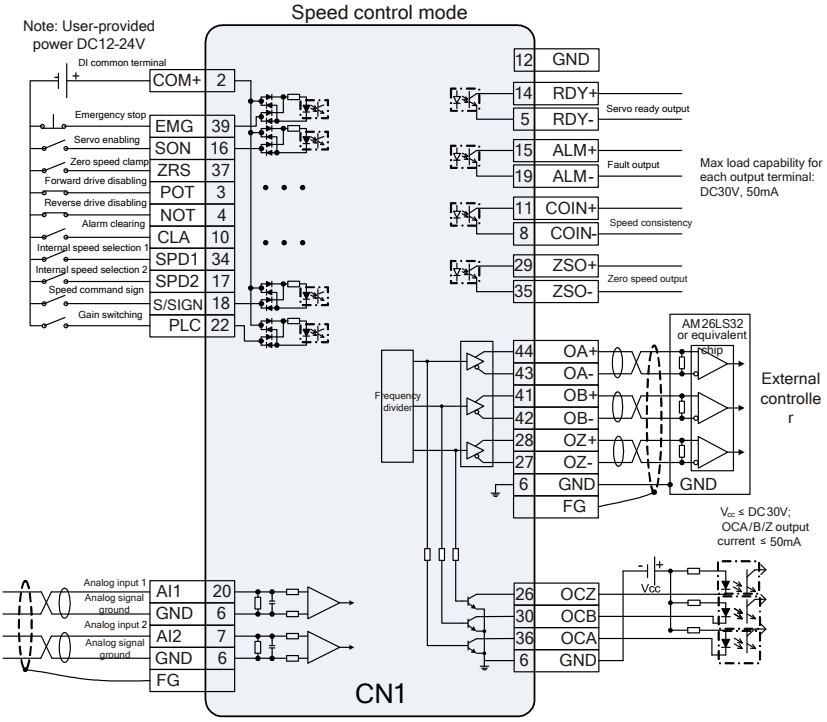

Note:

1. ( ) is shielded twisted cable.
2. ( ) is user-provided power.
3. ( ) is GND, corresponding to pin 6/12.

4.3 Standard wiring of torque mode

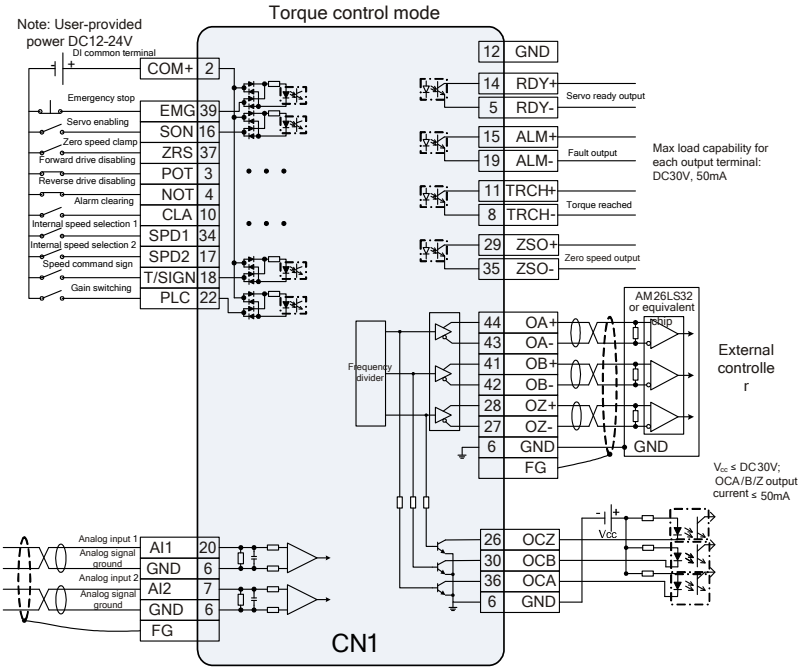

Note:

1. ( ) is shielded twisted cable.
2. ( ) is user-provided power.
3. ( ) is GND, corresponding to pin 6/12.

4.4 CN1 function instruction

4.4.1 Pins of CN1 terminal

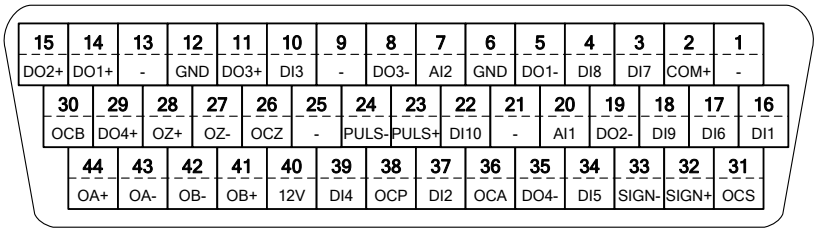

CN1 plug pins and signal codes

EtherCAT bus-type interface:

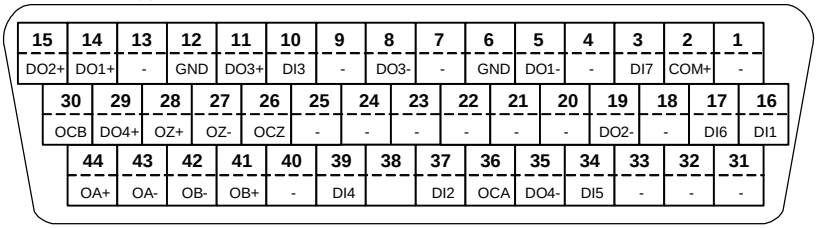

4.4.2 CN1 terminal definition

Pin	Symbol	Function	Pin	Symbol	Function
1	-	Unused	23	PULS+	Differential command pulse +
2	COM+	Common terminal of digital input	24	PULS-	Differential command pulse -
3	DI7	Digital input 7	25	-	Unused
4	DI8	Digital input 8	26	OCZ	Z-phase open collector output
5	DO1-	Digital output 1 -	27	OZ-	Z-phase differential output -
6	GND	Signal ground	28	OZ+	Z-phase differential output +
7	AI2	Analog input 2	29	DO4+	Digital output 4 +
8	DO3-	Digital output 3 -	30	OCB	B-phase open collector output
9	-	Unused	31	OCS	Open collector command direction
10	DI3	Digital input 3	32	SIGN+	Differential command direction +

Pin	Symbol	Function	Pin	Symbol	Function
11	DO3+	Digital output 3 +	33	SIGN-	Differential command direction -
12	GND	Signal ground	34	DI5	Digital input 5
13	-	Unused	35	DO4-	Digital output 4 -
14	DO1+	Digital output 1 +	36	OCA	A-phase open collector output
15	DO2+	Digital output 2 +	37	DI2	Digital input 2
16	DI1	Digital input 1	38	OCP	Open collector command pulse
17	DI6	Digital input 6	39	DI4	Digital input 4
18	DI9	Digital input 9	40	-	Unused
19	DO2-	Digital output 2 -	41	OB+	B-phase differential output +
20	AI1	Analog input 1	42	OB-	B-phase differential output -
21	-	Unused	43	OA-	A-phase differential output -
22	DI10	Digital input 10	44	OA+	A-phase differential output +

4.4.3 Power supply signal

Symbol	Pin	Name	Function
GND	6, 12	Signal ground	Analog input signal ground, namely the ground of A/B/Z frequency-division output signal
COM+	2	Common terminal of digital input	● If DI is active-low (0V), COM+ connects to the positive end of external DC power (12V–24V). ● If DI is active-high (12V–24V), COM+ connects to the reference ground of external DC power (12V–24V).
FG	Housing	Ground of the housing	The enclosure of CN1 terminal is connected with the enclosure of the drive.

4.4.4 Configuration table for different digital modes

Symbol	Pin	Name	Position mode			Speed mode		
			Default	No.	Function	Default	No.	Function
DI1	16	Digital input 1	0x003	SON	Enabling servo	0x003	SON	Enabling servo
DI2	37	Digital input 2	0x00D	ZRS	Zero-speed	0x00D	ZRS	Zero-speed

Symbol	Pin	Name	Position mode			Speed mode		
			Default	No.	Function	Default	No.	Function
					clamp			clamp
DI3	10	Digital input 3	0x004	CLA	Alarm clearing	0x004	CLA	Alarm clearing
DI4	39	Digital input 4	0x016	EMG	Emergency stop	0x016	EMG	Emergency stop
DI5	34	Digital input 5	0x019	SC1	Numerator 1 of electric gear ratio	0x00A	SPD1	Internal speed commands Terminal 1
DI6	17	Digital input 6	0x01A	SC2	Numerator 2 of electric gear ratio	0x00B	SPD2	Internal speed commands Terminal 2
DI7	3	Digital input 7	0x001	POT	Positive direction drive disabled	0x001	POT	Positive direction drive disabled
DI8	4	Digital input 8	0x002	NOT	Negative direction drive disabled	0x002	NOT	Negative direction drive disabled
DI9	18	Digital input 9	0x007	RPC	Clearing residual pulses	0x00E	S-SIGN	Speed command sign
DI10	22	Digital input 10	0x008	PLL	Command pulse disabled	0x006	PLC	Gain switchover
DO1	14/5	Digital output 1	0x001	RDY	Servo ready for output	0x001	RDY	Servo ready for output
DO2	15/19	Digital output 2	0x003	ALM	Fault output	0x003	ALM	Fault output
DO3	11/8	Digital output 3	0x007	PLR	Positioning completed	0x009	COIN	Speed consistent
DO4	29/35	Digital output 4	0x00D	ZSO	Zero output of speed	0x00D	ZSO	Zero output of speed

Symbol	Pin	Name	Torque mode		
			Default	No.	Function
DI1	16	Digital input 1	0x003	SON	Enabling servo
DI2	37	Digital input 2	0x00D	ZRS	Zero-speed clamp
DI3	10	Digital input 3	0x004	CLA	Alarm clearing
DI4	39	Digital input 4	0x016	EMG	Emergency stop
DI5	34	Digital input 5	0x00A	SPD1	Internal speed command 1
DI6	17	Digital input 6	0x00B	SPD2	Internal speed command 2
DI7	3	Digital input 7	0x001	POT	Positive direction drive disabled
DI8	4	Digital input 8	0x002	NOT	Negative direction drive disabled
DI9	18	Digital input 9	0x00F	T-SIGN	Torque command sign
DI10	22	Digital input 10	0x006	PLC	Gain switchover
DO1	14/5	Digital output 1	0x001	RDY	Servo ready for output
DO2	15/19	Digital output 2	0x003	ALM	Fault output
DO3	11/8	Digital output 3	0x010	TRCH	Torque reaching
DO4	29/35	Digital output 4	0x00D	ZSO	Zero output of speed

4.4.4.1 Function description of the digital input

Signal name	Symbol	Function number	Applicable mode		
Positive direction drive disabled	POT	0x01	P	S	T
Negative direction drive disabled	NOT	0x02	P	S	T
This function input is the drive prohibition against positive/negative direction. The concrete action is related to the setting of P3.40 [travel limit switch setting]: When P3.40 is set to 0 and positive direction input is disabled, the motor stops at the current					

position, only negative direction command input can be accepted. If the negative direction drive input is disabled, the motor stops at the current position, only positive direction command input can be accepted.
P3.40 is 1, the function is invalid;
P3.40 is 2, and prohibition of positive/negative drive input is valid, the drive alarms.

Signal name	Symbol	Function number	Applicable mode		
Enabling servo	SON	0x03	P	S	T
This function indicates the control signal of the servo enabling/disabling. If it is valid, the drive will provide power to the motor; if invalid, the drive will cut off connection.					

Signal name	Symbol	Function number	Applicable mode		
Alarm clearing	CLA	0x04	P	S	T
This function indicates the control signal of alarm clearing when the drive alarms. Some alarms cannot be cleared by this function. Please refer to chapter 10.4 for detailed information.					

Signal name	Symbol	Function number	Applicable mode		
Control mode switchover	MCH	0x05	P	S	T
This function indicates the control signal of mode switching when P0.03 is 3, 4 and 5. When the control mode is 0, 1, 2, 6 and 7 the function input is invalid.					

Signal name	Symbol	Function number	Applicable mode		
Gain switchover	PLC	0x06	P	S	T
This function indicates the control signal of 1st and 2nd gain switching.					

Signal name	Symbol	Function number	Applicable mode		
Clearing residual pulses	RPC	0x07	P		
This function indicates the control signal of retention pulse clearing and the detailed operation is relative to the setting of P3.45. P3.45=0 means electrical level clear. When the digital input is valid, retention pulse will be 0. P3.45=1 means rising edge clear. When the digital input triggers retention pulse clearing from the edge of 0→1, only clear once.					

Signal name	Symbol	Function number	Applicable mode		
Command pulse disabled	PLL	0x08	P		
This function indicates the control signal of stopping receiving the command pulse and the detailed operation is relative to the setting of P3.44. If P3.44 is set to 0, the function takes effect. When the digital input is valid, the drive suspends receiving command pulse input. If P3.44 is set to 1, the function is invalid.					

Signal name	Symbol	Function number	Applicable mode		
Torque limit switchover	TLC	0x09	P	S	
This function indicates the control signal of 1st and 2nd torque limit switching. Please refer to the instruction of P0.09.					

Signal name	Symbol	Function number	Applicable mode		
Internal speed command 1	SPD1	0x0A		S	T
Internal speed command 2	SPD2	0x0B		S	T
Internal speed command 3	SPD3	0x0C		S	

There are 1–8 signal selections for the internal speed command and 1–4 for the internal speed limit.

Control	P0.40 set	SPD3	SPD2	SPD1	Related parameter and
Speed mode	0	0	0	0	P0.46 internal speed 1
		0	0	1	P0.47 internal speed 2
		0	1	0	P0.48 internal speed 3
		0	1	1	P0.49 internal speed 4
		1	0	0	P0.50 internal speed 5
		1	0	1	P0.51 internal speed 6
		1	1	0	P0.52 internal speed 7
		1	1	1	P0.53 internal speed 8
Torque mode	0	0	0	0	P0.46 speed limit 1
		0	0	1	P0.47 speed limit 2
		0	1	0	P0.48 speed limit 3
		0	1	1	P0.49 speed limit 4

Signal name	Symbol	Function number	Applicable mode		
Zero-speed clamp	ZRS	0x0D		S	T
This function indicates the control signal of zero speed clamp. The detailed action is associated with the setting of P0.58 [Zero speed clamp mode]. For details, see the description for P0.58.					

Signal name	Symbol	Function number	Applicable mode		
Speed command sign	S-SIGN	0x0E		S	
This function indicates the sign selection of speed command input in the speed control mode. If P0.41 is 1, the input function is valid, and when the setting is 0, the function is invalid.					

Signal name	Symbol	Function number	Applicable mode		
Torque command sign	T-SIGN	0x0F			T
This function indicates the sign selection of torque command input in the torque control mode. If P0.61 is 1, the input function is valid, and when the setting is 0, the function is invalid.					

Signal name	Symbol	Function number	Applicable mode		
Internal position command 1	POS1	0x10	P		
Internal position command 2	POS2	0x11	P		
Internal position command 3	POS3	0x12	P		
Internal position command 4	POS4	0x13	P		
Internal position command 5	POS5	0x20	P		
Internal position command 6	POS6	0x21	P		
Internal position command 7	POS7	0x22	P		

These functions are the selections of 0–127 in the PTP (point-to-point) control mode. It has the same function with P5.20 and is valid when P0.20 is 2.

The combination of 7 digital inputs is used to select the different PTP position of PtP0.00–PtP2.55 and the corresponding target speed, ACC/DEC time and the delay time of P5.21–P5.68.

Control mode	POS7	POS6	POS5	POS4	POS3	POS2	POS1	Related parameter and set value
Position mode	0	0	0	0	0	0	0	PtP0.01[position of step 00]
	0	0	0	0	0	0	1	PtP0.03[position of step 01]
	0	0	0	0	0	1	0	PtP0.05[position of step 02]
	0	0	0	0	0	1	1	PtP0.07[position of step 03]
	0	0	0	0	1	0	0	PtP0.09[position of step 04]

	0	0	0	0	1	0	1	PtP0.11[position of step 05]
	0	0	0	0	1	1	0	PtP0.13[position of step 06]
	0	0	0	0	1	1	1	PtP0.15[position of step 07]
	0	0	0	1	0	0	0	PtP0.17[position of step 08]
	0	0	0	1	0	0	1	PtP0.19[position of step 09]
	0	0	0	1	0	1	0	PtP0.21[position of step 10]
	0	0	0	1	0	1	1	PtP0.23[position of step 11]
	0	0	0	1	1	0	0	PtP0.25[position of step 12]
	x	x	x	x	x	x	x	xxx
		1	1	1	1	1	0	PtP2.53[position of step 126]
	1	1	1	1	1	1	1	PtP2.55[position of step 127]

Signal name	Symbol	Function number	Applicable mode		
External fault	EXT	0x14	P	S	T
This function indicates the signal of external input fault alarm. If the digital input is valid, the drive will report Er10-3 and stop.					

Signal name	Symbol	Function number	Applicable mode		
Inertia ratio switchover	JC	0x15	P	S	T
This function indicates the control signal of inertia ratio switching between 1st inertia ratio and 2nd inertia ratio.					

Signal name	Symbol	Function number	Applicable mode		
Emergency stop	EMG	0x16	P	S	T
This function indicates the control signal of emergency stop. If P3.41 is set to 0 and when the digital input is valid, the drive will stop to report Er10-4.					

Signal name	Symbol	Function number	Applicable mode		
HOME switch input	HOME	0x17	P		

This function indicates the input signal of HOME SWITCH.

When the drive carries out HOME action, in some HOME mode, if the digital input is detected to be valid, HOME action is finished. See P5.10 for details.

Signal name	Symbol	Function number	Applicable mode		
Triggering homing	HTRG	0x18	P		

This function indicates the trigger control signal of HOME function, and the rising edge is valid.

This digital input has no relation with bus control. P5.15 [Homing trigger command] has the same function.

Signal name	Symbol	Function number	Applicable mode		
Numerator 1 of electric gear ratio	SC1	0x19	P		
Numerator 2 of electric gear ratio	SC2	0x1A	P		

The function is the selection signal of the electric gear ratio, up to 4 groups of electric gears can be switched.

Before using the function, it is necessary to set P0.22 to 0 and then set different electric gear ratio (P0.25–P0.29).

Note: If the electric gear is switched by digital value, it is necessary to set P4.10 to 0.

SC1	SC2	Electronic gear ratio	
		Numerator	Denominator
0	0	P0.25	P0.26
1	0	P0.27	P0.26
0	1	P0.28	P0.26
1	1	P0.29	P0.26

Signal name	Symbol	Function number	Applicable mode		
PTP control trigger	TRIG	0x1B	P		

In the PTP control mode, it needs to be used with internal position command 1–4.

During using, select the target step by the internal position command selection 1–4, and then trigger the switching action selected by target step via the rising edging of this digital value.

BARGH MOTION

Signal name	Symbol	Function number	Applicable mode		
Input switchover for vibration suppression	VS-SEL	0x1C	P		
The function is the control signal of 1st and 2nd vibration control frequency. When the digital input is valid, the internal software uses P1.38; when invalid, use P1.36.					

Signal name	Symbol	Function number	Applicable mode		
Quick stop	Q-STOP	0x1D	P	S	T
This function indicates the control signal of the fast stop of external control. When the digital input is valid, the motor decelerates to 0 from current speed at the curve set by P0.69; when the input is invalid, the motor will restore to the operation state before stop.					

Signal name	Symbol	Function number	Applicable mode		
PTP control stop	PTP-ST	0x1E	P		
This function indicates the control signal of stopping PTP operation in the PTP control mode. In the bus control mode, it has the same function with P5.20 when it is 2048.					

Signal name	Symbol	Function number	Applicable mode		
Absolute position clearing	PCLR	0x1F	P		
This function is used to clear the multi-turn absolute encoder. When this digital input is valid, the multi-turn data of the encoder will be cleared while the single-turn data remains unchanged, however, the absolute position feedback of the system will be cleared.					

Signal name	Symbol	Function number	Applicable mode		
Forward jogging	FJOG	0x23	P		
This function indicates the forward jogging. When this digital input is valid, forward jogging operation will be applied.					

Signal name	Symbol	Function number	Applicable mode		
Reverse jogging	RJOG	0x24	P		
This function indicates the reverse jogging. When this value is valid, reverse jogging operation will be applied.					

Signal name	Symbol	Function number	Applicable mode		
High/low speed switching of jogging	JOGC	0x25	P		
This function indicates the high/low speed switching of jogging. When this digital input is valid, high speed jogging will be applied.					

Signal name	Symbol	Function number	Applicable mode		
JOG function of the terminal	DJOG	0x2C	P		
When this digital input is valid, JOG function of the terminal is valid.					

Signal name	Symbol	Function number	Applicable mode		
Gantry synchronization input clear	GIN	0x2D	P		
When this digital input is valid, gantry synchronous is removed.					

Signal name	Symbol	Function number	Applicable mode		
Master gantry synchronization alignment sensor	GSM	0x2E	P		
Master gantry synchronization alignment sensor.					
Signal name	**Symbol**	**Function number**	**Applicable mode**		
Slave gantry synchronization alignment sensor	GSS	0x2F	P		
Slave gantry synchronization alignment sensor.					

Signal name	Symbol	Function number	Applicable mode		
Dynamic braking relay feedback	DBS	0x30	P	S	T
When this digital input is valid, the dynamic braking relay will be closed.					

Signal name	Symbol	Function number	Applicable mode		
Manual and automatic switching of turret	DAT	0x31	P		
When this digital input is valid, the turret is manual mode.					

Signal name	Symbol	Function number	Applicable mode		
Forward jogging of turret	DFJ	0x32	P		
When this digital input is valid, the turret is forward jogging.					

Signal name	Symbol	Function number	Applicable mode		
Reverse jogging of turret	DRJ	0x33	P		
When this digital input is valid, the turret is reverse jogging.					

Signal name	Symbol	Function number	Applicable mode		
Magnetic pole detection	PDET	0x34	P		
If this digital input is valid, the magnetic pole is checked.					

4.4.4.2 Digital output instruction

Signal name	Symbol	Function number	Applicable mode		
Servo ready for output	RDY	0x01	P	S	T
This function indicates the state signal of the drive. When valid, the drive can be enabled and provide power to the motor and when invalid, the drive gives no response to the command.					

Signal name	Symbol	Function number	Applicable mode		
Servo run output	RUN	0x02	P	S	T
This function indicates the state signal of the enabled drive. When valid, the motor is power on.					

Signal name	Symbol	Function number	Applicable mode		
Fault output	ALM	0x03	P	S	T
The function is the state signal when the drive displays the fault alarm. When it is valid, a fault occurs to the drive.					

Signal name	Symbol	Function number	Applicable mode		
Electromagnetic brake release signal	BRK	0x05	P	S	T

The function is the control release signal of output motor brake. When it is valid, the control brake is released and then it receives the motor control command; when invalid, the control brake will be disconnected.

Signal name	Symbol	Function number	Applicable mode		
Position command validity	PCMD	0x06	P		
The function is the state signal of whether there is position command or not. When it is valid, the motor is controlled by the non-zero position command.					

Signal name	Symbol	Function number	Applicable mode		
Positioning completed	PLR	0x07	P		
The function is the state signal of positioning finished. When it is valid, the positioning is finished.					

Signal name	Symbol	Function number	Applicable mode		
Control mode switchover status	MCHS	0x08	P	S	T
This function indicates the state signal during control mode switching in output compound control mode. When it is valid, control mode 1 is switched to mode 2; if the function output is invalid, the control mode 2 is switched back to mode 1.					

Signal name	Symbol	Function number	Applicable mode		
Speed consistent	COIN	0x09	P	S	T
The function is the state signal of speed consistent. When it is valid, the deviation between current speed feedback and speed command is in the range of P3.53.					

Signal name	Symbol	Function number	Applicable mode		
Speed reached	SR	0x0A	P	S	T
The function is the state signal of output speed reaching. When it is valid, the current speed feedback is in the setting value of P3.54.					

Signal name	Symbol	Function number	Applicable mode		
Speed being limited	SL	0x0B			T
The function is the state signal of speed limiting. When it is valid, in the torque mode, if the current torque does not reach the torque command, the speed feedback is in the speed limiting.					

Signal name	Symbol	Function number	Applicable mode		
Speed command validity	SCMD	0x0C	P	S	T
The function is the state signal of whether there is speed command or not. When it is valid, non-zero speed command controls the motors.					

Signal name	Symbol	Function number	Applicable mode		
Zero output of speed	ZSO	0x0D	P	S	T
The function is the state signal of whether the current speed feedback is 0.					

Signal name	Symbol	Function number	Applicable mode		
Torque being limited	LM	0x0E	P	S	T
The function is the state signal of torque limiting. When it is valid, it means current torque output has reached the max. torque limit setting.					

Signal name	Symbol	Function number	Applicable mode		
Zeroing completed	HEND	0x0F	P		
The function is the state signal of zero completed. When it is valid, the drive has finished returning to zero and found zero position successfully.					

Signal name	Symbol	Function number	Applicable mode		
Torque reaching	TRCH	0x10			T
The function is the state signal of output torque reaching. When it is valid, the deviation between current torque output and torque command will be in the setting range of P3.59; there is 5% detection retention.					

Signal name	Symbol	Function number	Applicable mode		
PTP arrival	PTPF	0x16	P		

Signal name	Symbol	Function number	Applicable mode		
This function indicates the output PTP arrival signal.					

Signal name	Symbol	Function number	Applicable mode		
PTP output 1	PTPO1	0x17	P		
This function indicates the output PTP output 1 signal.					

Signal name	Symbol	Function number	Applicable mode		
PTP output 2	PTPO2	0x18	P		
This function indicates the output PTP output 2 signal.					

Signal name	Symbol	Function number	Applicable mode		
PTP output 3	PTPO3	0x19	P		
This function indicates the output PTP output 3 signal.					

Signal name	Symbol	Function number	Applicable mode		
PTP output 4	PTPO4	0x1A	P		
This function indicates the output PTP output 4 signal.					

Signal name	Symbol	Function number	Applicable mode		
PTP output 5	PTPO5	0x1B	P		
This function indicates the output PTP output 5 signal.					

Signal name	Symbol	Function number	Applicable mode		
PTP output 6	PTPO6	0x1C	P		
This function indicates the output PTP output 6 signal.					

Signal name	Symbol	Function number	Applicable mode		
PTP output 7	PTPO7	0x1D	P		
This function indicates the output PTP output 7 signal.					

Signal name	Symbol	Function number	Applicable mode		
Gantry synchronization output clear	GSC	0x1E	P		
This function is to output the clearance signal of gantry synchronization.					

Signal name	Symbol	Function number	Applicable mode		
Dynamic braking relay control	DBRC	0x1F	P	S	T
This function indicates the output dynamic brake relay control signal.					

4.4.5 Pulse input signals and functions

Symbol	Pin	Name	Function
OCP	38	Position command pulse input 1	● In the position control mode, act as the position command input terminal. ● In other control mode, the terminal is invalid. ● Allowed Max. input pulse frequency: 4MHz in differential motion mode, 200kHz in open-collector mode.
PULS+	23		
PULS-	24		
OCS	31	Position command pulse input 2	
SIGN+	32		
SIGN-	33		

4.4.6 Analog input signals and functions

Symbol	Pin	Name	Default	Function	Function
AI1	20	Analog input 1	0x03	Speed command	● The accuracy of two analog inputs is 12 bits. ● External analog input terminals. The input impedance is 13kΩ. The input voltage range is -10V–+10V. A voltage exceeding ±11V may damage the drive. ● The range and offset setting and function definition can be set.
AI2	7	Analog input 2	0x04	Torque command	
GND	6,12	Signal ground	-	-	

4.4.7 Encoder output signals and functions

Symbol	Pin	Name	Function
OA+	44	A phase output	● Output the frequency divided encoder signal, comply with the standard of TIA/EIA-422-B. ● The output phase A pulse and phase B pulse is still
OA-	43		
OB+	41	B phase output	

Symbol	Pin	Name	Function
OB-	42		quadrature. When it rotates forward, phase B leads phase A by 90º. When it rotates in reverse, phase A leads phase B by 90º. ● Frequency division and frequency multiplication with any integer and decimal fraction is allowable. ● The output signals have no isolation.
OZ+	28	Z phase output	
OZ-	27		
OCA	36	A phase output	● Output the open-collector signal of phase A, without isolation.
OCB	30	B phase output	● Output the open-collector signal of phase B, without isolation.
OCZ	26	Z phase output	● Output the open-collector signal of phase Z, without isolation.

4.5 CN1 wiring instruction

4.5.1 Wiring of digital input circuit

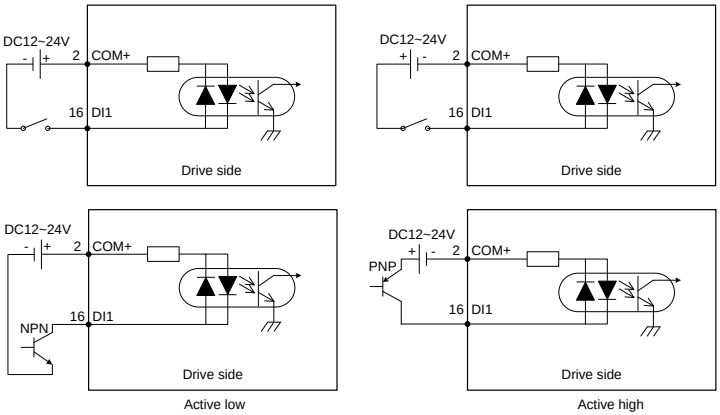

- The digital input power is user provided.
- The digital input circuit has two connection methods: a mechanical switch connection as shown in the figure and an open collector connection for triodes (NPN and PNP types, but the two cannot be mixed).

4.5.2 Wiring of the pulse input circuit

Wiring method 1: Differential mode

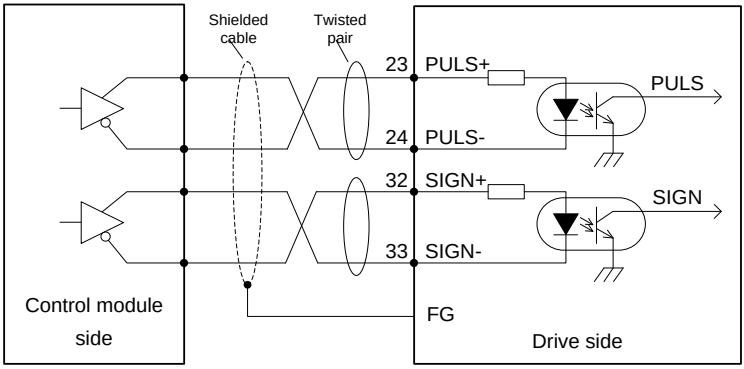

Note:

- The wiring method shown in the above figure can only be applied to 5V differential input signal, 12–24V single-ended collector can not be wired according to the above diagram, otherwise the circuit damage may be caused.
- The maximum frequency of input pulse is 4MHz and the input signal voltage is ±5V.
- With the superior anti-noise capability, this signal transmit method is recommended as the preferred.
- The shielded twisted-pair cables must be used and the length should be less than 3m.

Wiring method 2: Open-collector mode 24V

The control module is NPN type (common cathode):

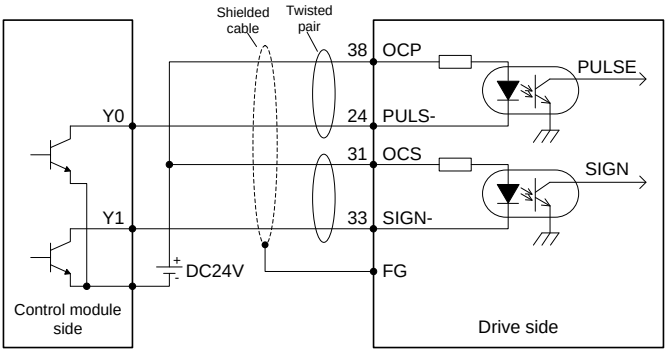

The control module is PNP type (common anode):

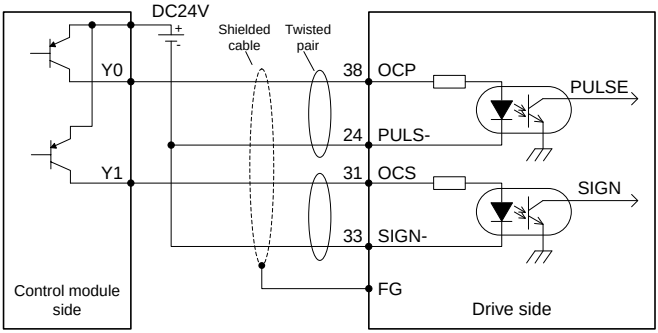

Note:

- The max. input pulse frequency is 200kHz.
- You need to connect an external 24V power supply. There is no need to connect a current-limiting resistor.
- Generally, most of Japanese PLC is NPN type, while most of European PLC is PNP type.
- The shielded twisted-pair cables must be used and the length should be less than 3m.

Wiring method 3: Open-collector mode 12V

The control module is NPN type (common cathode):

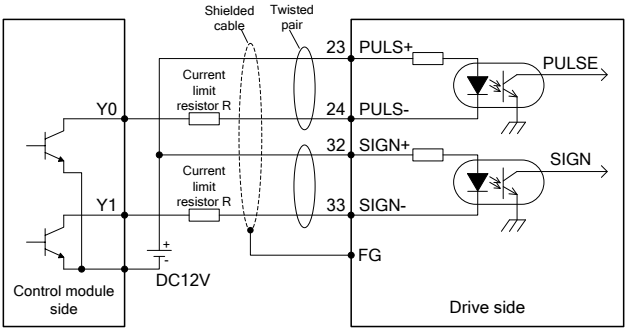

The control module is PNP type (common anode):

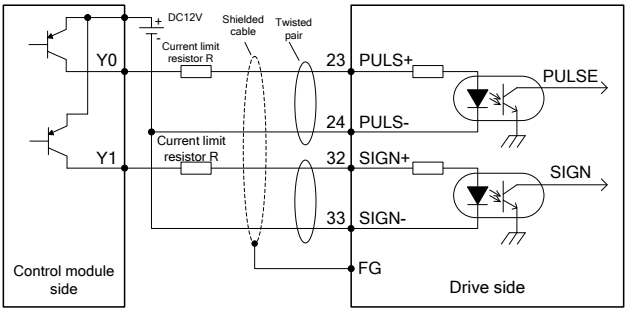

Note:

- The max. input pulse frequency is 200kHz.
- When you use an external 12V power supply, be sure to connect the current-limiting resistor R in series according to the above diagram. Otherwise, the internal circuit will be burnt down. R resistance is 1kΩ, and the power is not less than 1/4W.
- The shielded twisted-pair cables must be used and the length should be less than 3m.

4.5.3 Wiring of the analog input circuit

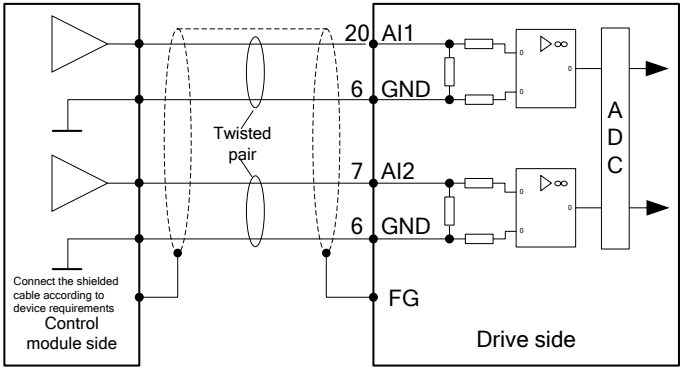

Note:

- There are two analog input circuits, AI1 and AI2, both of which are accurate to 12 bits.
- The input impedance is 13kΩ. The input voltage range is -10V–+10V. If the voltage is higher than ±11V, the circuits may be damaged.

4.5.4 Wiring of digital output circuit

Wiring when using the user-provided power supply:

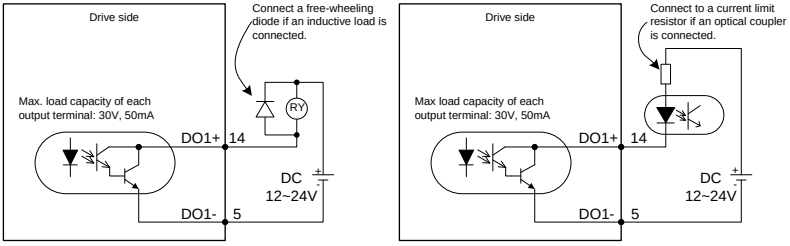

Note:

- There are four digital output circuits, all of which are open-collector output structures. They can be used to drive relay coils or optocoupler loads with the load capacity shown in the figure.
- When connecting inductive loads such as relay coils, install current-continuing diodes in the way shown in the figure. When connecting optocouplers, a current-limiting resistor must be connected; otherwise, damage to the drive may occur.

4.5.5 Wiring of frequency division output circuit of encoder feedback signal

Differential mode:

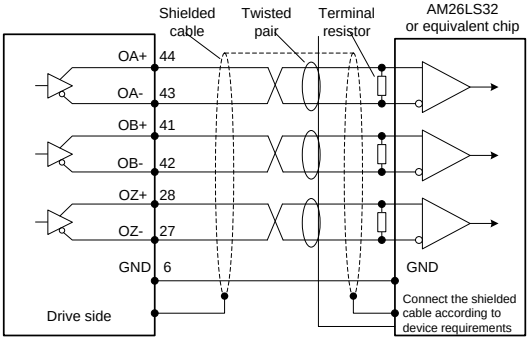

Note:

- Phase A, B and Z all provide differential output signals. It is recommended to use AM26C32 or equivalent differential receiving chip and be sure to fit a terminal matching resistor of about 220Ω.
- Output circuits have no isolation.

4.5.6 Wiring of the electromagnetic brake

If the servo drive is used in the vertical shaft applications, the electromagnetic brake can be used to stop and keep the dropping speed when servo drive is power off. The wiring diagram is:

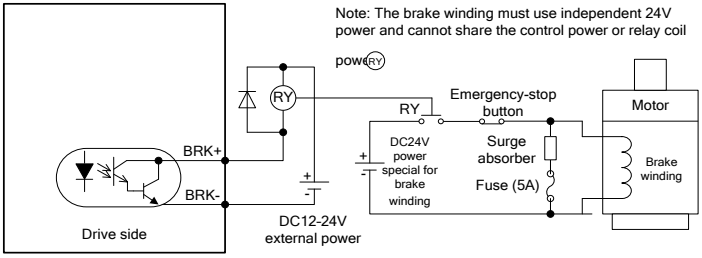

Note:

- BRK+ and BRK- can be connected to any digital output.
- 24V power supply specific for the electromagnetic brake cannot be used with the power supply for control signal.
- (RY) is the relay coil, please pay attention to the direction of the diode.
- The electromagnetic brake is used to keep the speed, other than stop.
- Please install the external braking devices besides the electromagnetic brake.

5 Operation and running

5.1 Running

5.1.1 First powering on

Please check following items before power on:

1. Wiring

- The power supply of the servo drive (L1 and L2) should be connect to proper techniques. See chapter 3.2 for details.
- The output phase of the servo drive (U, V and W) should be the same as that of the cables of the servo motor.
- There is no short circuit between the output of the servo drive (U, V and W) and the input power supply (L1 and L2).
- All wiring comply with the standard wiring shown in chapter 4.
- Ensure the external terminal (SON) for servo enabling is set to OFF.
- Ensure the servo drive and the servo motor are grounded to properly.
- When using external braking resistor, for products with small power range, the short connection cable between B2-B3 must be removed.
- Do not put voltage above DC24V on CN1.
- The cable stress is within the designated range.

2. Environment

- There are no foreign objections, such as metal and other wire lead which can cause short connection of signal and power wires.

3. Mechanical parts

- The installation of the servo motor and the connection of shafts and mechanics are reliable.
- The servo motor and the machines are available to run.
- Do not run the motor at negative load (the direction of the output torque of the motor is contrary to the motor speed direction).

If all above items are checked OK, switch on the power supply:

5.1.1.1 Sequence of powering ON/OFF

The control circuit and main circuit of the drive are powered together, thus indicating L1 and L2 are powered together.

5.1.1.2 Check after powering-on

After switching on the power supplies, if the power supply is OK, the LED indicator will display 0 first and then display 8. If there is no fault alarm of the servo drive, the LED on the front panel displays the current speed of the servo motor as default. The servo drive and servo motor do not sound abnormally. The default parameter can be set through parameter P0.15. If there is a fault of the servo drive, the LED displays current alarm sign and flickers. See chapter 9 Faults and solutions to handle the fault.

5.1.1.3 Set motor code

Before enabling operation, please set P0.00 according to the motor code on motor nameplate. Otherwise, the motor may operate abnormally or reversely and cause safety issues.

5.1.2 Trial jogging

Trial jogging can check whether the servo drive and the servo motor are intact and conduct preliminary debugging of the system including the servo drive, servo motor and peripheral equipment. Run the servo motor by JOG operation after ensuring that the wiring is correct and there is no fault alarm and no abnormal running, See section 5.2 Display and operation for detailed instructions. Before jog running, ensure:

- The motor isn't in running state. If the motor is running, JOG operation is invalid.
- The load inertia shouldn't exceed 15 times of the motor inertia. Otherwise it may cause serious mechanical vibration.
- The jog speed can be set via parameter P0.05.
- The accelerating/decelerating time during jogging can be set via parameters P0.54, P0.55, P0.56 and P0.57.

5.1.3 Running in position control mode

Simple wiring:

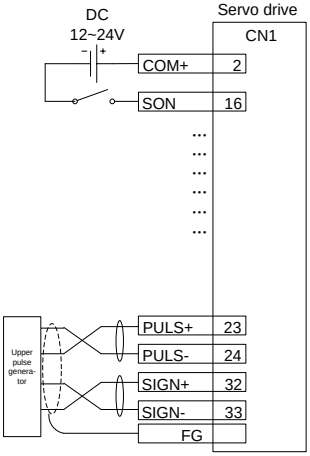

Parameters	Function	Setting
P0.03[1]	Control mode selection	0
P0.22[1]	Pulse number per motor resolution	Set according to the actual situation
P0.23[1]	Pulse input	Set according to the actual situation
P0.24[1]	Reverse of pulse input direction	0

Step 1 Complete the connection between the drive and the servo motor.

Step 2 Set P0.03 to “0”, the position control mode.

Step 3 Confirm the pulse output of the upper controller and adjust P0.23. Keep the pulse type the same with that of the upper controller. Please refer to the instruction of P0.23.

Step 4 Disconnect the control power supply after the modification of P0.03, P0.23 and then power on again.

Step 5 Connect the CN1 to the drive and power on, and ensure that SON and 24V GND are connected. Then the servo enters into the locking state.

Step 6 Send the low frequency pulse command from the upper controller and rotate the motor at low speed.

Step 7 Ensure the rotating direction of the motor is as the designated. The direction can be modified through the upper controller or operate on P0.24.

Step 8 Ensure the input pulse count complies with the design. You can set P0.22 [Pulses per motor resolution] or the electronic gear ratio parameters P0.25 and P0.26 to divide or multiply frequency. See the description for P0.22, P0.25 and P0.26 for details.

5.1.4 Running at the speed control mode

Simple connection:

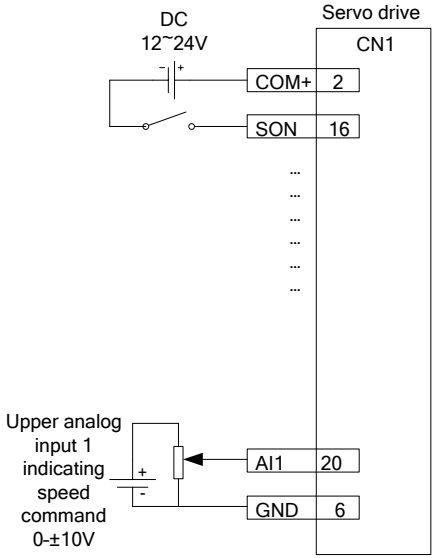

Parameters	Function	Setting
P0.03[1]	Control mode selection	1
P0.40	Speed command selection	1
P3.26	Function of analog input 1	3
P0.42	Analog input 1 gain	500
P3.20	Offset of analog input 1	Set according to the actual situation

Step 1 Complete the connection between the drive and the servo motor.

Step 2 Set P0.03 to 1, which indicates the speed control mode.

Step 3 It is necessary to disconnect the control power supply after saving the modified value of P0.03. And it will be valid after repowering on.

Step 4 Set P0.40 to “1” (external analog speed command mode).

Step 5 Set P3.26 to “3”, i.e. the function of analog input 1 is speed command.

Step 6 Set P0.42 to the required value. See the description for P0.42 for details.

Step 7 Connect the corresponding terminals of CN1.

Step 8 Connect the CN1 to the drive and power on, and ensure that SON and 24V GND are connected. Then the servo enters into the locking state.

Step 9 The motor shaft may rotate at a low speed if there is no upper command voltage. It is necessary to adjust P3.20. Please refer to the detailed instruction of P3.20.

5.1.5 Running at the torque control mode

Simple connection:

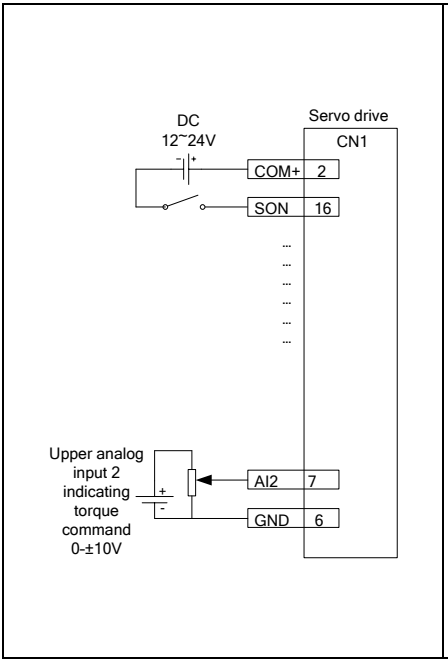

Parameters	Function	Setting
P0.03[1]	Mode selection	2
P0.60	Torque command selection	1
P3.27	Function of analog input 2	4
P0.61	Torque command direction selection	Set according to the actual situation
P0.62	Analog input 2 gain	10
P3.23	Offset of analog input 2	Set according to the actual situation
P0.46	Speed limit 1	100

Step 1 Complete the connection between the drive and the servo motor.

Step 2 Set P0.03 to 2, which indicates the torque control mode.

Step 3 It is necessary to disconnect the control power supply after saving the modified value of P0.03. And it will be valid after repowering on.

Step 4 Set P0.60 to “1” (external analog torque command mode).

Step 5 Set P0.61 as required. See the description for P0.61 for details.

Step 6 Set P3.27 to “4”, i.e. the function of analog input 1 is torque command.

Step 7 Set P0.62 to the required value. Please refer to the instruction of P0.62.

Step 8 Connect the corresponding terminals of CN1.

Step 9 Connect the CN1 to the drive and power on, and ensure that SON and 24V GND are connected. Then the servo enters into the locking state.

Step 10 The motor shaft may rotate at a low speed if there is no upper command voltage. It is necessary to adjust P3.23. Please refer to the detailed instruction of P3.23.

Step 11 In the torque mode, please adjust the speed limit and set P0.46 to the required value. Please refer to the instruction of P0.46.

5.1.6 Parameter setting before running the servo

Parameter setting must be conducted before running the servo. Relevant parameters can be set via the panel, PC software or communication to meet the function and performance requirements of the site application. See chapter 6 for the detailed description of all parameters of the servo drive. Some of these parameters need to be set according to the site application demand. For examples, pulse input mode, electronic gear, frequency division coefficient of encoder output, upper/lower limit of analog input, etc. Some of these parameters need to be set according to the site debugging. For example, the parameters of the regulator loop which affect the system performance and other similar parameters. For most parameters the factory default values are appropriate.

Hereunder only some necessary parameters are listed:

1. Mode setting

The control mode (position mode, speed mode, torque mode or other compound control mode) can be set through setting parameter P0.03 according to the control requirements on the site. The mode will be valid after repowering on.

2. Command input

Set or enter relevant commands to control the position, speed or torque of the servo motor's shaft according to the setting of parameter P0.03.

- In the position mode: pulse command (3 kinds of input mode), internal torque limit command or external analog torque limit command.
- In the speed mode: internal speed command or external analog speed command, internal torque limit command or external analog torque limit command.
- In the torque mode: internal torque command or external analog torque command, internal speed limit command or external analog speed limit command.

5.1.7 Servo enabling

Enable the servo via the external servo enabling terminal (SON) or internal servo enabling parameter (P0.04). See the function description of terminal SON and detailed explanation of parameter P0.04.

When servo is enabled:

- If no alarm occurs, the panel will display the default monitoring parameters.
- The fan starts to run.
- In position mode, if there is no pulse command input, the servo is in locked state.
- In the speed mode, the servo motor runs at the given speed.

- In the torque mode, if no torque is applied externally, the servo motor accelerates from zero speed to the limit speed. If the external torque is larger than the internal setting one, the servo motor maintains the state of zero speed output.
- If a servo alarm occurs, the panel will display ErXX-X and flicker and the servo motor will get into the inertia running state.

5.1.8 Servo stop/Stop running

If the servo drive is in the following conditions, the servo motor will coast to stop or stop normally. Coasting to stop means the drive cuts off output immediately, the motor coasts to stop under the action of inertia, and does not keep in locked state. Stopping means the drive outputs reverse torque to make the motor to decelerate to zero speed and, after that, the motor is in a locked state.

- When the servo enabling terminal (SON) signal is set to OFF, the servo motor will stop. Select the stopping method through setting parameter P4.30. See description of P4.30 for details. This process will not cause regenerative braking.
- When a fault alarm occurs, the servo motor will stop. Select the stopping method of the servo motor when an alarm occurs through setting parameter P4.30. See description of P4.30 for details. This process will not cause regenerative braking.
- When the digital input terminal configured as zero speed clamp (ZRS) is set to ON and P0.58 is at non-zero value, the servo motor stops running. When P0.58 is set to 1–3, the motor stops running based on the DEC time set by P0.55 and P0.57 in speed mode, and servo is in locked state after stop; in torque mode, the servo motor stops running immediately. Such stopping process may cause regenerative braking. If braking overload fault alarm occurred, please connect to proper external braking resistor.
- If the travel limit switch block function is invalid (parameter P3.40=0), and digital input terminal signal configured as travel limit (POT/NOT) is set to ON, P0.55 and P0.57 of the servo motor will immediately decelerate to stop based on the set value of P0.55 and P0.57. It will be in locked state after stop. If reverse running command input is generated after motor stops, the motor can run in reverse direction.
- If the emergency stop switch block function is invalid (parameter P3.41=0), and the digital input terminal configured as EMG is set to ON, the servo motor will coast to stop.
- If the duration of servo disable signal is too short (less than 500ms), PWM signal may be in off state once servo is enabled again.

5.1.9 Sequence diagram

5.1.9.1 Sequence diagram of power-on and servo ON

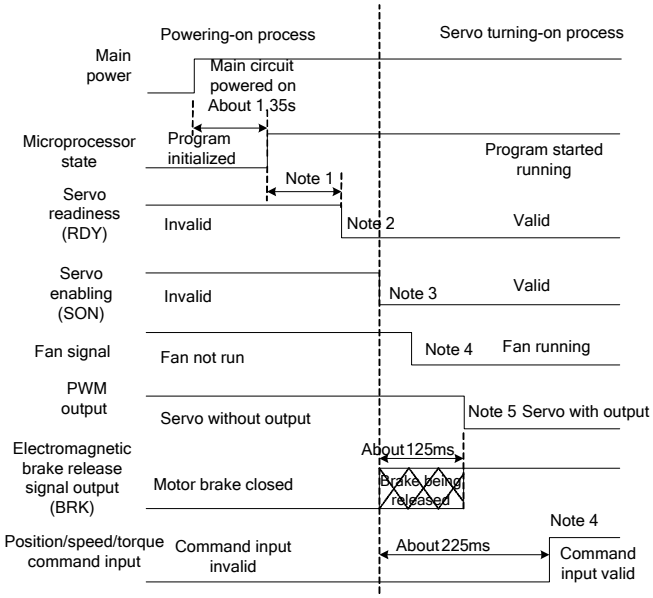

Note 1: The delay time from microprocessor initialization completion to servo readiness output can be set through P4.54.

Note 2: The condition for the RDY output signal electric level to become low is: The servo has no fault and main circuit DC voltage has been established with 250V/430V (for 220V/400V series). If the main circuit DC voltage is less than 170V/310V (for 220V/400V series), the Er13-1 alarm is reported. The time interval from servo readiness to servo enabling can be user controlled.

Note 3: The servo enabling signal can be valid only when the RDY output signal is valid.

Note 4: The time interval from servo enabling to fan running is 0-1s.

Note 5: The time interval from servo enabling to PWM output valid signal is 125ms, in which bootstrap time of about 3ms is included.

5.1.9.2 Sequence diagram of power loss during running

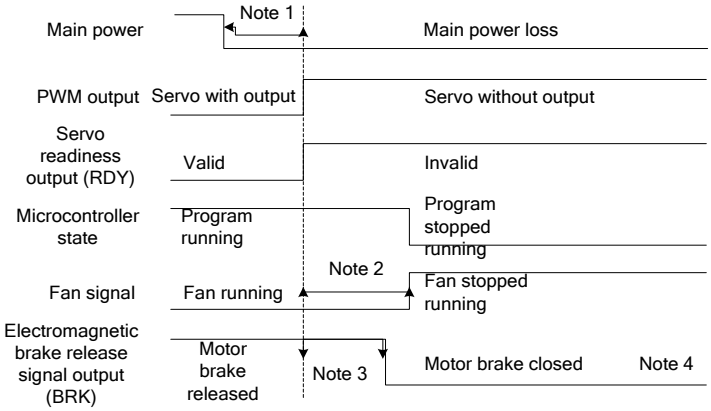

Note 1: If the voltage of the control power supply is less than 170V/330V(for 220V/400V series), the undervoltage fault will occur and the output level of the servo fault (ALM) will increase.
Note 2: If the drive temperature is less than 45 °C, the fan stops. If the module temperature is higher than 45 °C, the fan stops after the microprocessor stops.
Note 3: The output delay of the electromagnetic brake release signal can be set through P3.57. If the speed slows down under the setting of P3.58 (30r/min by default) during the time specified by P3.57, the BRK signal becomes invalid.
Note 4: The actual electrical levels corresponding to valid I/O states can be set through P3.00-P3.15.

5.1.9.3 Servo OFF sequence in a locked state

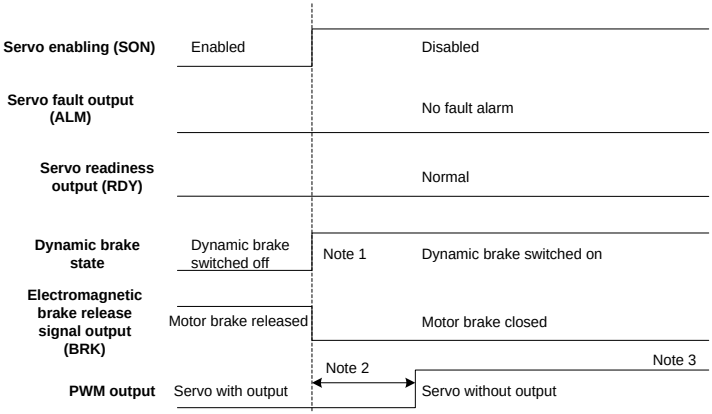

Note 1: Whether to immediately start the dynamic brake can be set through P4.30.
Note 2: The servo locking time after braking can be set through P3.56.
Note 3: The actual electrical levels corresponding to valid I/O states can be set through P3.00–P3.15.

5.1.9.4 Servo OFF sequence in running state

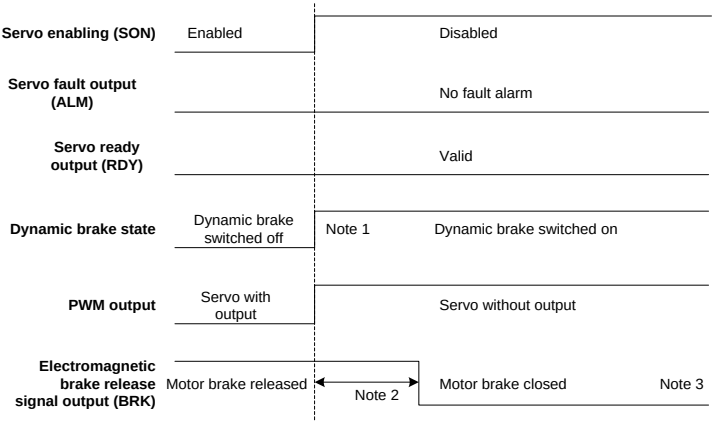

Note 1: Whether to immediately enable the dynamic brake can be set through P4.30.
Note 2: The output delay of the electromagnetic brake release signal is specified by P3.57. If the speed slows down under the setting of P3.58 during the time specified by P3.57, the BRK signal becomes invalid.
Note 3: The actual electrical levels corresponding to valid I/O states can be set through P3.00–P3.15.

5.1.9.5 Sequence of fault alarm

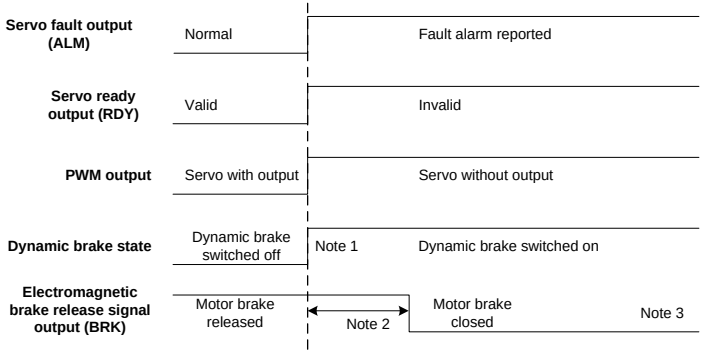

Note 1: Whether to immediately enable the dynamic brake can be set through P4.30.
Note 2: The output delay of the electromagnetic brake release signal is specified by P3.57. If the speed slows down under the setting (30r/min by default) of P3.58 during the time specified by P3.57, the BRK signal becomes invalid.
Note 3: The actual electrical levels corresponding to valid I/O states can be set through P3.00–P3.15.

5.2 Display and operation

5.2.1 Display

- **Keypad diagram:**

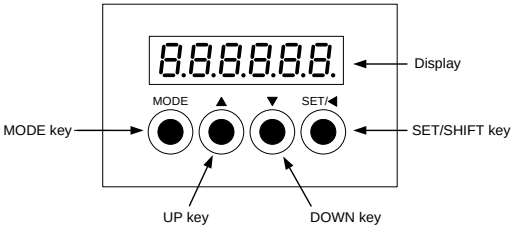

- **LED display character (reference table):**

Display	Means	Display	Means	Display	Means	Display	Means
	0		1		2		3
	4		5		6		7
	8		9		.		-
	a		b		c		d
	e		f		g		h
	i		j		k		l
	m		n		o		p
	q		r		s		t
	u		v		w		x
	y		z				

- **Key function table:**

Key	Function
MODE	To switch between modes or return to the previous menu level
UP	To select parameter upwards or increase value
DOWN	To select parameter downwards or decrease value
SET/SHIFT	**Press for a long time =SET** (about 0.6 seconds) To enter next menu in parameter mode and to confirm the setting of parameter in edit mode. **Press for a short time =SHIFT:** When setting a parameter, it is used to select the position of the current digit.

- **Operation flowchart:**

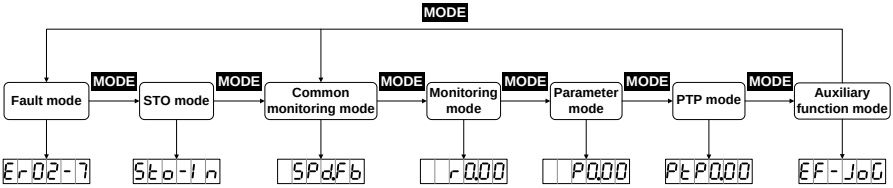

If the drive is power on, the screen will display 000000 for about 1 second, and then display 888888 for about 1 second, after that, enter into the “General monitoring mode”.

- Press **MODE** key to switch **General monitoring mode** > **Parameters mode** > **PTP mode** > **Auxiliary function mode** > **Fault mode** > **STO mode** as a cycle mode. If no fault or no STO input, the **fault mode** and **STO mode** can be ignored.
- If new fault occurs, it will switch to **Fault mode** by pressing **MODE** key. If no key is pressed in 20 seconds, it will switch to **Fault mode** automatically.
- In **General monitoring mode**, **UP/DOWN** key can be used to switch monitoring parameters. The name of parameters will display for 2.5 seconds, and then the current value will be displayed.
- In parameters mode, **SHIFT** key can be used to switch the group number and **UP/DOWN** key can be used to select the internal parameters number.
- In the parameters setting mode, pressing **SHIFT** to make the flickering words move left and use the **UP/DOWN** key to modify the setting value of the MSB.
- After parameters setting, pressing **SET** key to save the parameters or execute the commands.
- After parameters setting, the screen will display SAVED (for storage parameter and when P0.17 is set to 0 [individual storage]) or SUCCES (for non-storage parameter or P0.17 is set to 1 [batch storage]), and then return to the parameters mode automatically.

- Setting of long parameters (corresponds to parameters with over 6 digits) in parameter area:

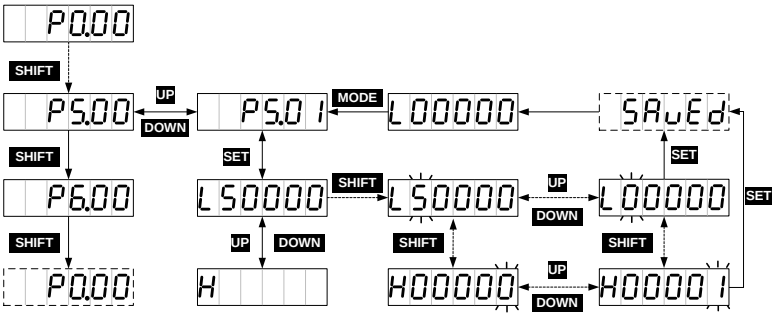

5.2.2 Common monitoring mode

After power on, the screen will enter into **General monitoring mode**, display the parameters name for about 2.5 seconds and then display the current value. After pressing **MODE** key, **UP/DOWN** key can be used to switch monitoring parameters. See chapter 10.3 Common monitoring parameter table for details. The monitoring parameters displayed by default can be set via P0.15. If no operation is carried out under interfaces other than parameter value display interface, it will return to the monitoring parameter interface in 20 seconds.

Operation flowchart:

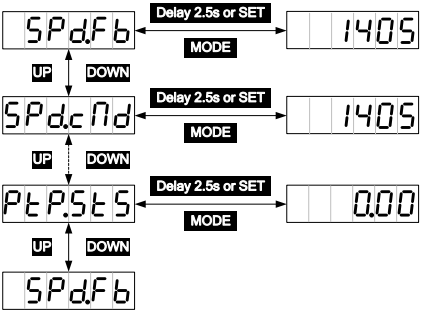

5.2.3 Monitoring mode

MODE key can be used to switch into the monitoring mode. **SHIFT** key can be used to select the group number of the monitoring parameters, **UP/DOWN** can be used to select the internal parameter number and pressing for a long time, it can be used to select the parameter number quickly. After finding the target, **SET** key can be used to view the current value and **MODE** can be used to return the displaying interface. If no operation in R3 menu interface, it will return to the monitoring interface in 20 seconds. If no operation in R0 and R1 menu interface, it will stay on the displaying interface.

Operation flowchart:

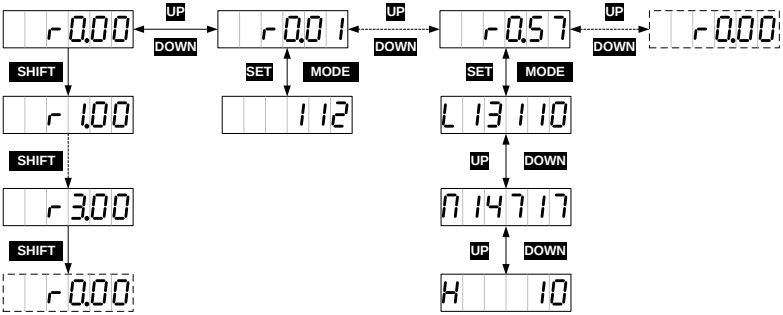

5.2.4 Parameter setting mode

MODE key can be used to switch into the parameters setting mode. **SHIFT** key can be used to select the group number of the monitoring parameters, **UP/DOWN** can be used to select the internal parameter number and pressing for a long time, it can be used to select the parameter number quickly. After locating a target parameter, you can press **SET** to enter the current parameter value display screen and then press **SHIFT** to enter the parameter setting screen where the parameter LSB blinks. In the setting interface, **UP/DOWN** key can be used to set the value, **SHIFT** key can be used to select the setting bit. After setting, press **SET** key to save the parameters. After finishing, the screen will display SAVED (for storage parameters and P0.17 is set to 0) or SUCCES (for non-storage parameter or P0.17 is set to 1), and then return to the parameters mode automatically.

Operation flowchart:

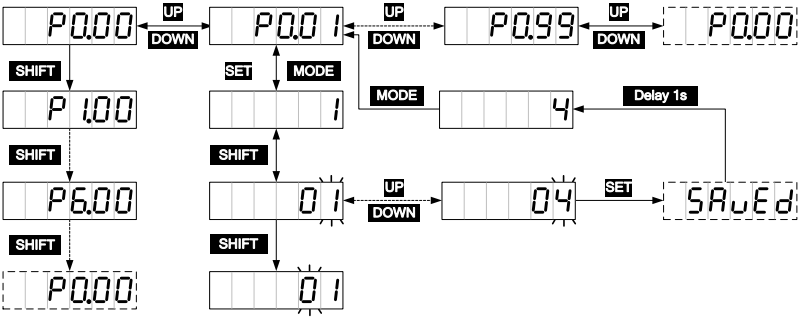

5.2.5 Auxiliary function instruction

5.2.5.1 Auxiliary function menu

You can press **MODE** to enter the auxiliary function mode and press **UP/DOWN** to select auxiliary functions, the auxiliary function table is shown below.

Sign	Name
EF-JoG	Jogging test
EF-dAF	Restoring to default
EF-PJo	Program commissioning
EF-AA1	Analog input 1 zero drift clear
EF-AA2	Analog input 2 zero drift clear
EF-AA3	Analog input 3 zero drift clear
EF-JId	Inertia identification
EF-Enc	Absolute value encoder clear

Note: The auxiliary functions can be operated only when servo is disabled, otherwise users cannot enter the auxiliary function menu.

5.2.5.2 Operation flowchart of trial jogging

Press **MODE** key to switch to the auxiliary function mode. Press **UP/DOWN** key to the EF-JoG menu, and press **SET** key to the jogging interface. The interface will display the current speed of the motor. Press **UP** key, the motor will rotate to the setting speed anticlockwise and stops when releasing the key. Press **DOWN** key, the motor will rotate to the setting speed clockwise and stops when releasing the key.

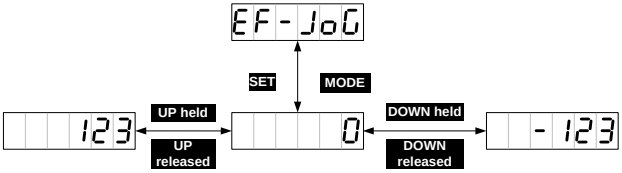

5.2.5.3 Operation flowchart of restoring the factory parameter

Press **MODE** key to switch to the auxiliary function mode. Press **UP/DOWN** key to enter the EF-dAF menu, and press **SET** key to enter the default parameter restoring screen, displaying rEAdy. Then you can press **SET** to restore parameters. During the restoring process, the screen displays StArt. When the process ends, the screen displays FInISh. The zero-drift clearing process for analog input 1, 2, and 3 is similar to the factory parameter restoring process.

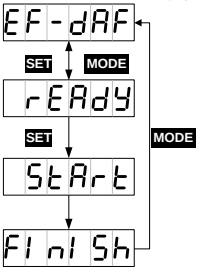

5.2.5.4 Program jogging

After the running parameters P5.00–P5.05 are set, you can press **MODE** to switch to the auxiliary function mode. Press **UP/DOWN** key to enter the EF-PJo menu, and press **SET** key to enter the program jogging screen, displaying rEAdy. Then you can press **SHIFT** to switch between rEAdy and on to enable and disable program jogging. On the on screen, you can press **UP** or **DOWN** to start program jogging. The use of the **UP** or **DOWN** key is associated with P5.00. If the motor running direction is counterclockwise, the **UP** key must be used for the starting. If the motor running direction is clockwise, the **Down** key must be used for the starting. After the starting, the current rotation speed of the motor is displayed.

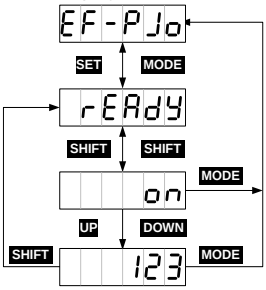

5.2.5.5 Operation flowchart of inertia identification

Press **MODE** key to switch to the auxiliary function mode. Press **UP/DOWN** key to enter the EF-JId menu, and press **SET** key to enter the program jogging screen, displaying rEAdy. Then you can press **SET** to enable inertia identifying. After inertia identifying is complete, the result data such as 23 is displayed about three seconds and then saved automatically. The screen returns to the parameter setting menu automatically after displaying SAvEd about two seconds.

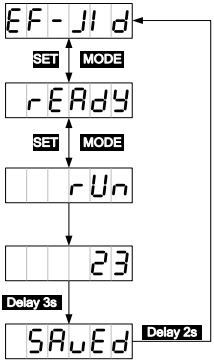

5.2.5.6 Operation flowchart of absolute encoder clearing

If a multiturn absolute encoder is used, the homing operation for the mechanical system must be performed after the first power-on. Then you can press **MODE** to enter the auxiliary function mode, press **UP/DOWN** to enter the menu, and press **SET** to enter the absolute encoder clearing menu, which displays rEAdy. Then you can press **SET** to enable absolute encoder clearing. The screen displays StArt. If the clearing is successful, the screen displays FInISh. If the encoder type does not match or the clearing fails, the screen displays Error.

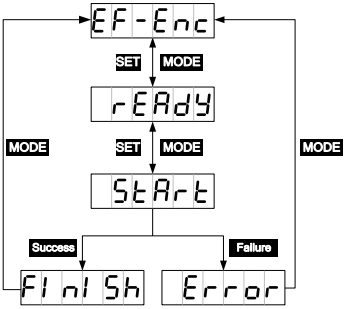

5.2.6 Alarm display

If the servo drive runs abnormally, it reports a fault alarm and stops automatically, while the LED panel displays the fault alarm symbol in the format of ErXX-X, in which XX is the main code and X is the sub code.

For details, see section 10.4 "Fault codes".

5.2.7 Alarm clearing

For those faults that can be cleared online, if the fault condition is removed, fault alarm display can be cleared by short connecting the digital input terminal configured as fault clearing function (P3.00–P3.09 configured as 0x004 or 0x104) with COM-. If the servo still has enabling command input, the drive will not be able to clear the fault automatically.

For the fault alarms which cannot be cleared online, it can be cleared after repower on.

6 Function codes

P-position mode; S-speed mode; T-torque mode.

The definition of direction: From the angle of facing motor shaft, the counterclockwise direction is forward (CCW for short); clockwise (CW) is reverse; in terms of speed and torque reference value, positive value means position direction and negative value means negative direction.

The function codes with the superscript of “1” indicate that these parameters can be valid only when the system is reset and restarted or repowered after disconnection.

The function codes with the superscript of “2” indicate that these parameters are valid when the servo drive stops. The modification during operation is invalid.

The function codes with the superscript of “*” indicate that these parameters are not saved after power off.

Modbus communication address is decimal, the address of PROFIBUS-DP is the same with Modbus; CANopen communication address is hex and the length of 16-bit is the primary code and the length of 8-bit is the sub-code.

6.1 Basic control (P0 group parameters)

6.1.1 Basic setting

<table>
<tr><td rowspan="2">P0.00[1]</td><td rowspan="2">Motor model</td><td>Setting range</td><td>Default</td><td>Unit</td><td colspan="3">Applicable mode</td></tr>
<tr><td>0–9999999</td><td>1010104*[1]</td><td>-</td><td>P</td><td>S</td><td>T</td></tr>
<tr><td colspan="8">This parameter is set to 0 by default. Users must set according to motor nameplate.
If the motor model is 0, and the motor is standard communication-type encoder motor, the drive will read the motor parameters automatically.
For example, the nameplate of 400W motor is shown below.
 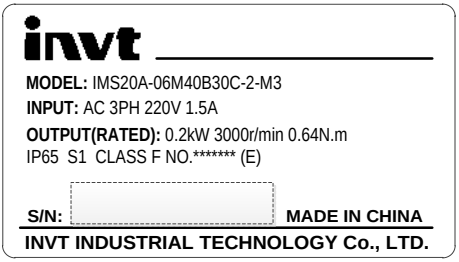

In the above figure, 3010004 in "No.3010004" is the value of this parameter.
Note: Improper parameter value will result in abnormal operation of servo system, or even lead to serious drive or motor faults. Double check whether this parameter matches with the motor before the initial power up.</td></tr>
</table>

P0.00[1]	**Data size**	32bit	**Data format**	DEC
	Modbus address	1000, 1001	**CANopen address**	0x2000, 0x00

P0.01[1]	Encoder type	**Setting range**	**Default**	**Unit**	**Applicable mode**		
		1–14	4*[1]	-	P	S	T

In most cases, if P0.00 is set correctly, the system assigns a value to this parameter. You do not need to set it. If an encoder disconnection fault is reported during power-on though the motor is connected correctly, check whether the drive supports the encoder used by the motor. For details, see section 1.1.3 "Drive naming". The servo motor code contains the encoder type. For details, see section 1.2.2 “Motor naming".

The mapping between encoder types and settings of P0.01 is as follows:

Motor nameplate encoder type*[2]	**Set value**	**Meaning**
3	3	17-bit single-turn absolute value
4	[4]	17-bit multi-turn absolute value*[3]
9	10	23-bit multi-turn absolute value*[3]
-	Other	Reserved

*[1] The encoder type varies with the motor type.

*[2] See No. 8 in the table in section 1.2.2 "Motor naming" for encoder types.

*3 If you use a multiturn encoder, change the battery only when the drive power is on, which prevents the absolute position from being lost. The standard battery is 2000 mAh and the replacement cycle is 1.5–2 years.

P0.01[1]	**Data size**	16bit	**Data format**	DEC
	Modbus address	1002, 1003	**CANopen address**	0x2001, 0x00

P0.02[1]	Forward rotation of motor*[1]	**Setting range**	**Default**	**Unit**	**Applicable mode**		
		0–1	0	-	P	S	T

Set the forward rotation of motor:

Set value	**Meaning**
[0]	Anticlockwise is forward rotation
1	Clockwise is forward rotation

*[1] Definition of forward rotation of motor. The view angle faces shaft output direction of motor.

P0.02[1]	**Data size**	16bit	**Data format**	DEC

	Modbus address	1004, 1005	CANopen address	0x2002, 0x00

P0.03[1]	Control mode selection	Setting range	Default	Unit	Applicable mode		
		0–9	0	-	P	S	T

This parameter can be used to set the operating mode of the system:

Set value	1st working mode	2nd working mode	Description
[0]	P		Position mode: Control the angular displacement of servo motor via internal/external position command, thus achieving controlling over mechanical motion displacement.
1	S	-	Speed mode: Control the rotation speed of the servo motor with the internal or external speed command.
2	T	-	Torque mode: Control the torque of the servo motor with the internal or external torque command.
3	P	S	Switching between the position and speed modes: The position mode and speed mode can be switched through the control mode switching terminal. 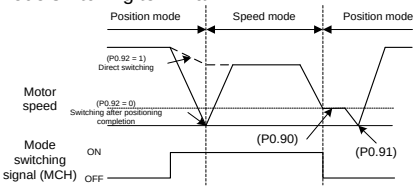 **Note:** There are two methods (specified by P0.92) to switch from the position mode to the speed mode. In the process of switching from the speed mode to the position mode, the motor stops at the reference position specified by P0.91 before switching to the position mode.
4	P	T	Switching between the position and torque modes: The position mode and torque mode can be switched through the control mode switching terminal. 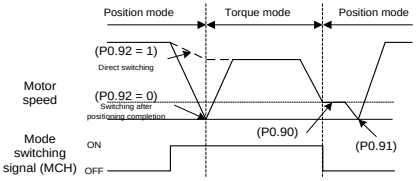 **Note:** There are two methods (specified by P0.92) to switch from the position mode to the torque mode. In the process of

P0.03[1]	Control mode selection	Setting range	Default	Unit	Applicable mode		
		0–9	0	-	P	S	T

			switching from the torque mode to the position mode, the motor stops at the reference position specified by P0.91 before switching to the position mode.
5	S	T	Switching between the speed and torque modes: The speed mode and torque mode can be switched through the control mode switching terminal. 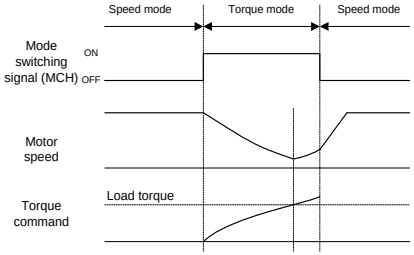 **Note:** The switching is not limited by the current working condition.
6	-	-	(Reserved)
7	CANopen	-	CANopen mode (supported by the CANopen servo)
8	EtherCAT	-	EtherCAT mode (supported by the EtherCAT servo)

Remarks: If P0.03 is set, parameters P3.00–P3.09 are automatically switched according to the current control mode.

Note: 0: Off (The internal optical coupler corresponding to the input is not conducted.)
1: On (The internal optical coupler corresponding to the input is conducted.)

P0.03[1]	Data size	16bit	Data format	DEC
	Modbus address	1006, 1007	CANopen address	0x2003, 0x00

P0.04*	Internal enabling command	Setting range	Default	Unit	Applicable mode		
		0–1	0	-	P	S	T

This parameter is used to control the running state of the servo drive.

The mapping between the settings of this parameter and external terminal enabling commands are as follows:

Set value	External terminal command state	Working state of servo drive
0	0 (The internal optical coupler corresponding to the input is not conducted.)	Stand-by (OFF)
0	1 (The internal optical coupler corresponding to the input is conducted.)	Enabled (ON)
1	0 (The internal optical coupler corresponding to the input is not conducted.)	Enabled (ON)
1	1 (The internal optical coupler corresponding to the input is conducted.)	Enabled (ON)

Note:

- If P0.04 is set to 1, but the external terminal command status is changed from 1 to 0, the drive is disabled, that is, P0.04 is changed to 0 automatically.
- The method for setting this parameter on the LED panel is different from that for setting other parameters. You can use only the **SET** key to switch between 0 and 1. The **UP/DOWN** key is invalid on the screen for setting this parameter.

P0.04*	**Data size**	16bit	**Data format**	DEC
	Modbus address	1008, 1009	**CANopen address**	0x2004, 0x00

P0.05	Jogging speed	**Setting range**	**Default**	**Unit**	**Applicable mode**		
		0–1000	200	r/min	P	S	T

This parameter specifies the jogging speed. For details, see section 5.2.5.2 "Jogging test". During the jogging process, the ACC/DEC time parameters (P0.54, P0.55, P0.56, and P0.57) are active, and the motor accelerates, decelerates, starts, or stops based on the settings.

P0.05	**Data size**	16bit	**Data format**	DEC
	Modbus address	1010, 1011	**CANopen address**	0x2005, 0x00

P0.06[1]	Numerator of frequency division output coefficient	**Setting range**	**Default**	**Unit**	**Applicable mode**		
		0–(2^{31}-1)	10000	-	P	S	T

P0.07[1]	Denominator of frequency division output coefficient	Setting range	Default	Unit	Applicable mode		
		1–(2^{31}-1)	131072	-	P	S	T

By setting the numerator and denominator of the frequency division output coefficient, the position from the encoder feedback can be frequency divided by any integer or decimal fraction and then output through the encoder pulse output signal terminals (OA+, OA-, OB+ and OB-, corresponding to pins 44, 43, 41, and 42) of the CN1 plug.

$$\text{Drive output pulses} = \frac{\text{P0.06}}{\text{P0.07}} \times \text{Encoder resolution}$$

Note:

- In position control mode, if the encoder output signal of the upper-level servo motor is used as the position pulse command input of the current-level servo drive, that is, executing the master/slave follow-up of the start/stop type, in order to ensure high positioning accuracy of the current-level servo drive, the frequency division coefficient must be 1:1. Otherwise, the accuracy of master/slave position follow-up is affected.
- By default, P0.07 is 131072 and P0.06 is 10000, indicating the encoder pulse output terminal outputs 10000 pulse signals each time the motor rotates a circle. If P0.06 is changed to 5000, the encoder pulse output terminal outputs 5000 pulse signals in the same situation.

P0.06[1]	Data size	32bit	Data format	DEC
	Modbus address	1012, 1013	CANopen address	0x2006, 0x00
P0.07[1]	Data size	32bit	Data format	DEC
	Modbus address	1014, 1015	CANopen address	0x2007, 0x00

P0.08[1]	Reverse of frequency division output	Setting range	Default	Unit	Applicable mode		
		0–1	0	-	P	S	T

This parameter specifies whether to reverse the phase-B pulse logic of pulse output. Then the phase relationship between phase-A pulses and phase-B pulses can be changed.

Set value	Logic of phase B	CCW	CW
[0]	Not reverse	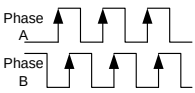	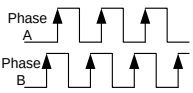
1	Reverse	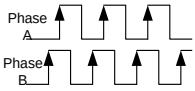	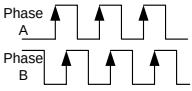

P0.08[1]	Data size	16bit	Data format	DEC

	Modbus address	1016, 1017	**CANopen address**	0x2008, 0x00

P0.09	Torque limit mode setting	**Setting range**	**Default**	**Unit**	**Applicable mode**		
		0–6	1	-	P	S	

This parameter is used to set the torque limit mode.

Set value	**Forward direction**	**Reverse direction**
0	Torque limit (analog input 0V–10V)	Torque limit (analog input -10V–0V)
[1]	Max. torque limit 1 (P0.10)	
2	Max. torque limit 1 (P0.10)	Max. torque limit 2 (P0.11)
3	TLC OFF→ Max. torque limit 1 (P0.10) TLC ON→ Max. torque limit 2 (P0.11)	
4	Forward torque limit (analog input 0V–10V)	Negative torque limit (analog input 0V–10V)
5	Forward torque limit (analog input 0V–10V)	
6	Torque command (analog input 0V–10V)	

Note: If P0.09 is set to 3, torque switching does not take effect immediately, but limited by the settings of P4.51 and P4.52. The torque switching limit is shown in the following figure.

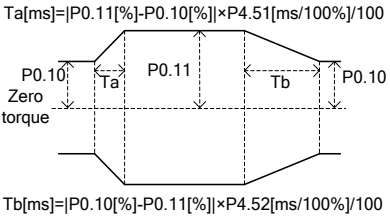

P0.09	**Data size**	16bit	**Data format**	DEC
	Modbus address	1018, 1019	**CANopen address**	0x2009, 0x00

P0.10	Max. torque limit 1	**Setting range**	**Default**	**Unit**	**Applicable mode**		
		0.0–500.0	300.0	%	P	S	T
P0.11	Max. torque limit 2	**Setting range**	**Default**	**Unit**	**Applicable mode**		
		0.0–500.0	300.0	%	P	S	

These parameters can be used to set the maximum torque of the servo motor output. Taking the rated torque of the servo motor as 100%, the setting is the percentage of the rated torque of the

servo motor. If the absolute value of the torque command is larger than the value of this parameter, then the actual output torque will be limited by the parameter.

Note:

- These parameters are used with P0.09.
- In torque mode, the limit value is determined by P0.10.

P0.10	**Data size**	16bit	**Data format**	DEC
	Modbus address	1020, 1021	**CANopen address**	0x200A, 0x00
P0.11	**Data size**	16bit	**Data format**	DEC
	Modbus address	1022, 1023	**CANopen address**	0x200B, 0x00

P0.12	Input selection for 3PH input-type servo power supply	**Setting range**	**Default**	**Unit**	**Applicable mode**		
		0–1	0	-	P	S	T

This parameter specifies the input type of a three-phase input-type servo drive power supply.

Set value	**Meaning**
[0]	3PH input
1	1PH input

P0.12	**Data size**	16bit	**Data format**	DEC
	Modbus address	1024, 1025	**CANopen address**	0x200C, 0x00

P0.13[1]	External braking resistor power	**Setting range**	**Default**	**Unit**	**Applicable mode**		
		0–5000	200	W	P	S	T
P0.14[1]	Resistance of the external braking resistor	**Setting range**	**Default**	**Unit**	**Applicable mode**		
		1–1000	60	Ω	P	S	T

If an external brake resistor is used, the settings of the parameters must be the same as the power and resistance of the external brake resistor.

Note: Brake overload detection should be used with P4.34. If P4.34 is set to 2, the brake overload detection logic uses the external brake resistor parameters to execute fault detection. If this group of parameter does not match the power and resistance of the external brake resistor, the brake overload fault (Er07-0) may be reported by mistake or even the brake resistor may be burnt down. The regenerative brake overload protection time of the external brake resistor is in direct proportion to the two parameters and is in inverse proportion to the brake rate during actual running.

The two parameters are invalid when P4.34 is not 2.

P0.13[1]	**Data size**	16bit	**Data format**	DEC
	Modbus address	1026, 1027	**CANopen address**	0x200D, 0x00

P0.14[1]	**Data size**	16bit	**Data format**	DEC
	Modbus address	1028, 1029	**CANopen address**	0x200E, 0x00

P0.15	Default monitoring parameters	**Setting range**	**Default**	**Unit**	**Applicable mode**		
		0–22	0	-	P	S	T

This parameter specifies the status parameters that are monitored upon power-on:

Set value	**Meaning**	**Display**	**Unit**
[0]	Motor rotation speed	SPd.Fb	r/min
1	Speed command	SPd.cMd	r/min
2	Pulse feedback accumulation	PLS.Fb	reference unit
3	Pulse command accumulation	PLS.cMd	reference unit
4	Retention pulse	PLS.Er1	reference unit
5	Hybrid control deviation	PLS.Er2	reference unit
6	Current torque	trq.Fb	%
7	Main circuit DC voltage	U.bUS1	V
8	Output voltage	U.oUt	Vrms
9	Output current	I.oUt	Arms
10	Drive temperature	MdL.tMP	°C
11	Torque limit	trq.LMt	%
12	Encoder feedback value	Enc.Fb	pulse
13	Rotor position relative to Z pulse	Enc.AbS	pulse
14	Load inertia ratio	J-r	%
15	Output power	PoWEr	%
16	Motor load ratio	LoAd-r	%
17	Numerator of actual electronic gear ratio	nUM	-
18	Denominator of actual electronic gear ratio	dEn	-

	19	Pulse speed command	PLS.SPd	r/min
	20	Instant speed	SPd.Fb1	r/min
	21	PTP state	PtP.StS	-

P0.15	**Data size**	16bit	**Data format**	DEC
	Modbus address	1030, 1031	**CANopen address**	0x200F, 0x00

P0.16	Parameter modification operation locked	**Setting range**	**Default**	**Unit**	**Applicable mode**		
		0–1	0	-	P	S	T

This parameter is used to lock the parameter modification function (exclude P0.16 and parameters which cannot be saved after power off) to avoid mis-operation by users.

Set value	**Through the panel**	**Through communication**
[0]	Parameter modification valid	Parameter modification valid
1	Parameter modification invalid	Parameter modification invalid

P0.16	**Data size**	16bit	**Data format**	DEC
	Modbus address	1032, 1033	**CANopen address**	0x2010, 0x00

P0.17	Mode for writing to EEPROM	**Setting range**	**Default**	**Unit**	**Applicable mode**		
		0–1	0	-	P	S	T

This parameter specifies the mode for writing parameter settings that are modified through the panel to the EEPROM.

Set value	**Command pulse input**
[0]	Saved one by one (automatic saved after modification)
1	Bulk saving (be saved in bulk by P4.91 after modification)

P0.17	**Data size**	16bit	**Data format**	DEC
	Modbus address	1034, 1035	**CANopen address**	0x2011, 0x00

P0.18*	Factory password	**Setting range**	**Default**	**Unit**	**Applicable mode**		
		0–65536	0	-	P	S	T

This parameter enables you to view factory parameters and modify menus.

P0.18*	**Data size**	16bit	**Data format**	DEC
	Modbus address	1036, 1037	**CANopen address**	0x2012, 0x00

P0.19	Main circuit power AC/DC selection	Setting range	Default	Unit	Applicable mode		
		0–65536	0	-	P	S	T

This parameter specifies the power input type for the main circuit.

Set value	Power input
[0]	Terminals L1, L2, and L3 input AC power.
1	Terminals + and – input DC power.

P0.19	Data size	16bit	Data format	DEC
	Modbus address	1038, 1039	CANopen address	0x2013, 0x00

6.1.2 Position control

P0.20[1]	Position command selection	Setting range	Default	Unit	Applicable mode		
		0–4	0	-	P		

This parameter specifies the position command source in the position, fully-closed loop, and hybrid position control modes.

Set value	Position command source
[0]	Pulse input
1	Communication bus input
2	PTP control
3	(Reserved)
4	2nd encoder input

P0.20[1]	Data size	16bit	Data format	DEC
	Modbus address	1040, 1041	CANopen address	0x2014, 0x00

P0.22[1]	Pulses per motor resolution	Setting range	Default	Unit	Applicable mode		
		0–(2^{31}-1)	10000	reference unit	P		

This parameter specifies the number of pulses required per motor resolution.

Note: If P0.22 is set to a non-zero value, the settings of P0.25–P0.29 are invalid. If a 17-bit or 20-bit encoder is used together, you are recommended to set a greater value to achieve higher accuracy.

P0.22[1]	Data size	32bit	Data format	DEC
	Modbus address	1044, 1045	CANopen address	0x2016, 0x00

P0.23[1]	Pulse input	Setting range	Default	Unit	Applicable mode

		0–2	0	-	P		

This parameter specifies the pulse input mode. There are three pulse input modes available.

Set value	Pulse input form	Signal form	Diagram	
			CCW	CW
[0]	Pulse + sign	Pulse+ Sign	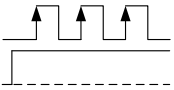	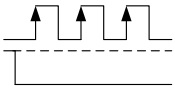
1	CCW/CW pulse train	CW+CCW	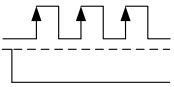	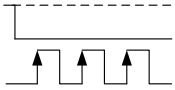
2	Quadrature encoder pulse mode	QEP	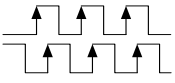	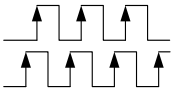

Note: The pulse direction specified by this parameter can be reversed by P0.24[1]. See P0.24[1] for details.

P0.23[1]	**Data size**	16bit	**Data format**	DEC
	Modbus address	1046, 1047	**CANopen address**	0x2017, 0x00

P0.24[1]	Reverse of pulse input direction	**Setting range**	**Default**	**Unit**	**Applicable mode**		
		0–1	0	-	P		

By setting this parameter, the input pulse direction can be reversed. At this time, the actual output speed direction of the servo drive is opposite to the direction specified by P0.23[1].

Set value	Command pulse input
[0]	Pulse input direction does not change.
1	Pulse input direction is opposite to the original input direction.

P0.24[1]	**Data size**	16bit	**Data format**	DEC
	Modbus address	1048, 1049	**CANopen address**	0x2018, 0x00

P0.25	Numerator of electronic gear ratio 1	**Setting range**	**Default**	**Unit**	**Applicable mode**		
		0–(2^{31}-1)	0	-	P		
P0.26	Denominator of electronic gear ratio	**Setting range**	**Default**	**Unit**	**Applicable mode**		
		1–(2^{31}-1)	10000	-	P		
P0.27	Numerator of	**Setting range**	**Default**	**Unit**	**Applicable mode**		

	electronic gear ratio 2	0–(2^{31}-1)	0	-	P		
P0.28	Numerator of electronic gear ratio 3	**Setting range**	**Default**	**Unit**	**Applicable mode**		
		0–(2^{31}-1)	0	-	P		
P0.29	Numerator of electronic gear ratio 4	**Setting range**	**Default**	**Unit**	**Applicable mode**		
		0–(2^{31}-1)	0	-	P		

Concept of the electronic gears: For any pulse input, the quantity and frequency of pulse actually received by the drive can be changed by multiplying a certain coefficient. This coefficient is electronic gear ratio. It can be divided into two parts: numerator and denominator:

Electronic gear ratio = g1/ g2;

Of which, g1: indicates the numerator of the electronic gear ratio;

g2: indicates the denominator of the electronic gear ratio;

The following is the schematic diagram for the electronic gear ratio:

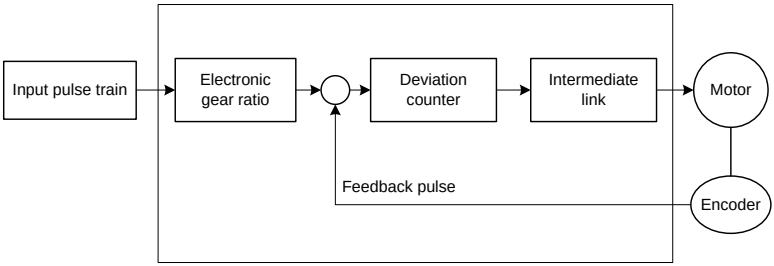

Example: The following is an example where 1 pulse is equivalent to a feed rate of 10μm:

Mechanical specifications: Feed of the ball screw Pb =10mm;

DEC ratio n=3/5;

Resolution of the servo motor encoder =10000;

The electronic gear ratio is as follows:

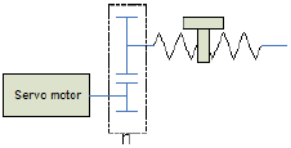

$$\frac{g1}{g2}=\Delta\ell_0\bullet\frac{Pt}{\Delta S}=\Delta\ell_0\bullet\frac{Pt}{n\cdot Pb}=10\times10^{-3}\bullet\frac{10000}{(3/5)\cdot10}=\frac{50}{3}$$

In the expression, $\Delta\ell_0$: Feed corresponding to each pulse (mm/pulse)

ΔS: Feed corresponding to each rotation motor (mm/rotation)

In this example: g1=50, g2=3

Set P0.25 to 50 and P0.26 to 3.

The servo drive has four groups of electronic gear ratio. You can determine which parameters are selected from P0.25, P0.26, P0.27 P0.28, and P0.29 to make up the electronic gear ratio through the electronic gear ratio selection terminals SC1 and SC2 of the CN1 plug.

SC1	SC2	Position mode
0	0	Numerator of electronic gear ratio 1
1	0	Numerator of electronic gear ratio 2
0	1	Numerator of electronic gear ratio 3
1	1	Numerator of electronic gear ratio 4

Note:

- This group of parameters is valid only when P0.22[1] is 0.
- If SC1 and SC2 are used for electronic gear ratio switching, P4.10 must be set to 0.

P0.25	**Data size**	32bit	**Data format**	DEC
	Modbus address	1050, 1051	**CANopen address**	0x2019, 0x00
P0.26	**Data size**	32bit	**Data format**	DEC
	Modbus address	1052, 1053	**CANopen address**	0x201A, 0x00
P0.27	**Data size**	32bit	**Data format**	DEC
	Modbus address	1054, 1055	**CANopen address**	0x201B, 0x00
P0.28	**Data size**	32bit	**Data format**	DEC
	Modbus address	1056, 1057	**CANopen address**	0x201C, 0x00
P0.29	**Data size**	32bit	**Data format**	DEC
	Modbus address	1058, 1059	**CANopen address**	0x201D, 0x00

P0.33[2]	Smooth filtering of position command	**Setting range**	**Default**	**Unit**	**Applicable mode**		
		0.0–1000.0	0.0	ms	P		

This parameter specifies the time constant for a first-order low pass filter corresponding to a position command, reducing the mechanical shock caused by sudden input pulse command frequency changes.

See the following figure.

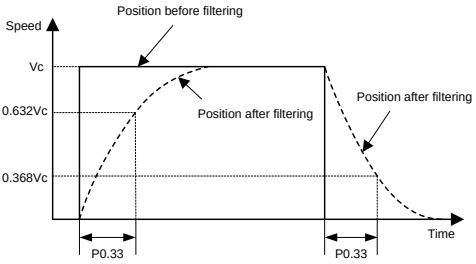

P0.33[2]	Data size	16bit	Data format	DEC
	Modbus address	1066, 1067	CANopen address	0x2021, 0x00

P0.34[2]	FIR filter of position command	Setting range	Default	Unit	Applicable mode		
		0.0–1000.0	0.0	ms	P		

This parameter specifies the time constant for the FIR filter corresponding to a position command, reducing the mechanical shock caused by sudden input pulse command frequency changes. See the following figure.

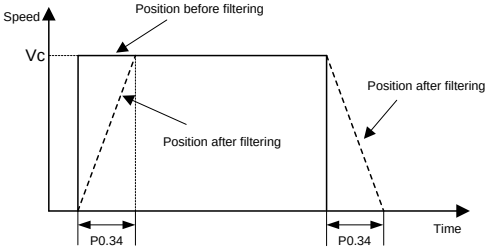

Note: If this parameter is modified during servo running, the modification takes effect after stop.

P0.34[2]	Data size	16bit	Data format	DEC
	Modbus address	1068, 1069	CANopen address	0x2022, 0x00

P0.35	Software limit in CCW position control	Setting range	Default	Unit	Applicable mode		
		$-(2^{31}-1)$–$(2^{31}-1)$	0	reference unit	P		

This parameter specifies the software limit in CCW position control.

If P0.35 is 0 and P0.36 is 0, software limit is invalid.

Note: The software limit function is valid only when this parameter is greater than P0.36.

P0.35	Data size	32bit	Data format	DEC
	Modbus address	1070, 1071	CANopen address	0x2023, 0x00

P0.36	Software limit in CW position control	Setting range	Default	Unit	Applicable mode		
		$-(2^{31}-1)$–$(2^{31}-1)$	0	reference unit	P		

This parameter specifies the software limit in CW position control.

If P0.35 is 0 and P0.36 is 0, software limit is invalid.

Note: The software limit function is valid only when this parameter is less than P0.35.

P0.36	Data size	32bit	Data format	DEC
	Modbus address	1072, 1073	CANopen address	0x2024, 0x00

P0.37	Position command mode	Setting range	Default	Unit	Applicable mode		
		0–1	0	-	P		

This parameter specifies the position command mode when P0.20 [Position command source] is set to 1, and it is invalid in other modes.

Set value	Position command mode
[0]	Incremental (The position command input is the variation relative to the current position.)
1	Absolute (The position command input is the target position.)

P0.37	Data size	16bit	Data format	DEC
	Modbus address	1074, 1075	CANopen address	0x2025, 0x00

6.1.3 Speed and torque control

P0.40	Speed command selection	Setting range	Default	Unit	Applicable mode		
		0–5	1	-		S	

This parameter specifies the command source in speed control.

Set value	Input mode	Description
0	Internal speed	P3.00–P3.09 can be used to control the internal multi-step speed (SPD1 is 0x00A, SPD2 is 0x00B, SPD3 is 0x00C):

SPD3	SPD2	SPD1	Parameters	Speed mode
0	0	0	P0.46	Internal speed 1
0	0	1	P0.47	Internal speed 2
0	1	0	P0.48	Internal speed 3
0	1	1	P0.49	Internal speed 4
1	0	0	P0.50	Internal speed 5
1	0	1	P0.51	Internal speed 6
1	1	0	P0.52	Internal

		<table><tr><td></td><td></td><td></td><td></td><td>speed 7</td></tr><tr><td>1</td><td>1</td><td>1</td><td>P0.53</td><td>Internal speed 8</td></tr></table> See the descriptions for P0.46–P0.53.
[1]	Analog input	You need to set either P3.26 [Function of AI 1] or P3.27 [Function of AI 2] to 3 [Speed command] and set associated parameters according to the actual situation.
2	Bus input	The communication bus interface can be used to receive speed commands from the upper computer. If P4.10 is 1 [Bus input], the motor speed can be changed by P4.13 [Bus speed command]. See the descriptions for P4.10 and P4.13.
3	(Reserved)	-
4	(Reserved)	-
5	High resolution internal speed	High resolution internal speed, precision 0.1r/min

P0.40	**Data size**	16bit	**Data format**	DEC
	Modbus address	1080, 1081	**CANopen address**	0x2028, 0x00

P0.41	Setting of speed command direction	**Setting range**	**Default**	**Unit**	**Applicable mode**		
		0–1	0	-		S	

This parameter is used to set the forward/reverse direction when P0.40 is 0 and 1 and the speed command sign is selected as S-SIGN.

Set value	**Internal speed step/analog input**		**Speed command sign**	**Speed command direction**
[0]	Positive speed	0V–10V	Not work	Forward direction
	Negative speed	-10V–0V	Not work	Reverse direction
1	Not work		Valid	Forward direction
	Not work		Invalid	Reverse direction

P0.41	**Data size**	16bit	**Data format**	DEC
	Modbus address	1082, 1083	**CANopen address**	0x2029, 0x00

P0.42	Analog input 1 gain	**Setting range**	**Default**	**Unit**	**Applicable mode**

		10–2000	100	[P3.26 unit]/V	P	S	T

This parameter specifies the gain of analog input 1, the gain unit is associated with P3.26.

Note:

- Analog input 1 indicates the signal input from the terminals (that is, AD1 and GND, corresponding to pin 1 and pin 5) of analog input 1 of the CN1 plug.
- The voltage only in the -10V–+10V range can be applied to the connection between AI1 and GND. Otherwise, the drive may be damaged.

Application example:

1. The function of analog input 1 is speed command.
2. The voltage of analog input 1 corresponds to the conversion gain of the motor command speed.
3. When P0.40 is set to “1”, this parameter is valid.
4. The relationship between the voltage of analog input 1 and speed command is as follows: Every 1V voltage corresponds to the 100 r/min speed by default.

Actual speed command ＝ Analog input voltage x P0.42

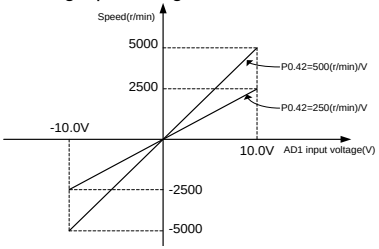

Note:

- When P0.40 is set to “1”, this parameter is valid.
- Set this parameter according to the motor working condition. If this parameter is set to a large value, the motor speed may fluctuate sharply.

P0.42	**Data size**	32bit	**Data format**	DEC
	Modbus address	1084, 1085	**CANopen address**	0x202A, 0x00

P0.43	Reverse of AI 1	**Setting range**	**Default**	**Unit**	**Applicable mode**		
		0–1	0	-	P	S	T

This parameter specifies the voltage polarity of analog input 1.

Set value	**Actual detection result**	
[0]	Positive polarity	[+Voltage]→[Positive value], [-Voltage]→[Negative value]
1	Negative polarity	[+Voltage]→[Negative value], [-Voltage]→[Positive value]

P0.43	**Data size**	16bit	**Data format**	DEC
	Modbus address	1086, 1087	**CANopen address**	0x202B, 0x00

P0.45	Dead zone of AI 1	**Setting range**	**Default**	**Unit**	**Applicable mode**		
		0.000–3.000	0.000	V	P	S	T
If the absolute voltage value of analog input 1 falls in the range of this parameter, the							
P0.45	**Data size**	16bit	**Data format**	DEC			
	Modbus address	1090, 1091	**CANopen address**	0x202D, 0x00			
P0.46	Internal speed 1/speed limit 1	**Setting range**	**Default**	**Unit**	**Applicable mode**		
		-20000–20000	100	r/min		S	T
P0.47	Internal speed 2/speed limit 2	**Setting range**	**Default**	**Unit**	**Applicable mode**		
		-20000–20000	0	r/min		S	T
P0.48	Internal speed 3/speed limit 3	**Setting range**	**Default**	**Unit**	**Applicable mode**		
		-20000–20000	0	r/min		S	T
P0.49	Internal speed 4/speed limit 4	**Setting range**	**Default**	**Unit**	**Applicable mode**		
		-20000–20000	0	r/min		S	T
P0.50	Internal speed 5	**Setting range**	**Default**	**Unit**	**Applicable mode**		
		-20000–20000	0	r/min		S	
P0.51	Internal speed 6	**Setting range**	**Default**	**Unit**	**Applicable mode**		
		-20000–20000	0	r/min		S	
P0.52	Internal speed 7	**Setting range**	**Default**	**Unit**	**Applicable mode**		
		-20000–20000	0	r/min		S	
P0.53	Internal speed 8	**Setting range**	**Default**	**Unit**	**Applicable mode**		
		-20000–20000	0	r/min		S	

The servo drive supports the 8-step internal speed commands and 4-step internal speed limits.

Control mode	P0.40 set value	SPD3	SPD2	SPD1	Related parameter and set value
Speed mode	0	0	0	0	P0.46 internal speed 1
		0	0	1	P0.47 internal speed 2
		0	1	0	P0.48 internal speed 3
		0	1	1	P0.49 internal speed 4
		1	0	0	P0.50 internal speed 5
		1	0	1	P0.51 internal speed 6
		1	1	0	P0.52 internal speed 7
		1	1	1	P0.53 internal speed 8
Torque mode	0	0	0	0	P0.46 speed limit 1
		0	0	1	P0.47 speed limit 2
		0	1	0	P0.48 speed limit 3
		0	1	1	P0.49 speed limit 4

Note:

- SPD1, SPD2, SPD3 are the digital inputs of internal speed commands 1, 2, and 3 (corresponding to 0x00A, 0x00B, and 0x00C).
  0: OFF (The internal optical coupler corresponding to the input is not conducted.)
  1: ON (The internal optical coupler corresponding to the input is conducted.)
- The speed limits depend on the absolute values of the parameters and, the directions are the same as those in torque commands.

P0.46	**Data size**	16bit	**Data format**	DEC
	Modbus address	1092, 1093	**CANopen address**	0x202E, 0x00
P0.47	**Data size**	16bit	**Data format**	DEC
	Modbus address	1094, 1095	**CANopen address**	0x202F, 0x00
P0.48	**Data size**	16bit	**Data format**	DEC
	Modbus address	1096, 1097	**CANopen address**	0x2030, 0x00
P0.49	**Data size**	16bit	**Data format**	DEC
	Modbus address	1098, 1099	**CANopen address**	0x2031, 0x00
P0.50	**Data size**	16bit	**Data format**	DEC
	Modbus address	1100, 1101	**CANopen address**	0x2032, 0x00
P0.51	**Data size**	16bit	**Data format**	DEC
	Modbus address	1102, 1103	**CANopen address**	0x2033, 0x00
P0.52	**Data size**	16bit	**Data format**	DEC
	Modbus address	1104, 1105	**CANopen address**	0x2034, 0x00
P0.53	**Data size**	16bit	**Data format**	DEC

	Modbus address	1106, 1107	**CANopen address**	0x2035, 0x00

P0.54	ACC time	**Setting range**	**Default**	**Unit**	**Applicable mode**		
		0–30000	0	ms		S	
P0.55	DEC time	**Setting range**	**Default**	**Unit**	**Applicable mode**		
		0–30000	0	ms		S	

ACC/DEC time is the time taken to accelerate from 0 r/min to the rated (3000 r/min by default) speed in the given command or decelerates from the rated speed to 0 r/min. If the given speed is not equal to the rated speed, the actual ACC/DEC time is the set ACC/DEC time multiplied by the ratio of the given speed to the rated speed. If the speed command is negative, the absolute value is used to calculate the ACC/DEC time.

Example: If the given speed is 2000 r/min, the rated speed is 3000 r/min, and the ACC/DEC time (P0.54/P0.55) is set to 1500, then the actual ACC time t1 is 1500×(2000/3000)=1000ms and the DEC time t2 is 1500×(2000/3000)=1000ms.

See the following figure:

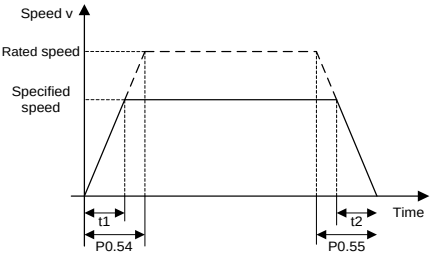

Note: ACC/DEC time can be used in the speed mode only.

P0.54	**Data size**	16bit	**Data format**	DEC
	Modbus address	1108, 1109	**CANopen address**	0x2036, 0x00
P0.55	**Data size**	16bit	**Data format**	DEC
	Modbus address	1110, 1111	**CANopen address**	0x2037, 0x00

P0.56	S-curve ACC time	**Setting range**	**Default**	**Unit**	**Applicable mode**		
		0–1000	0	ms		S	
P0.57	S-curve DEC time	**Setting range**	**Default**	**Unit**	**Applicable mode**		
		0–1000	0	ms		S	

In a rated-speed command, this group of parameter is used to set the duration of the circular arc segments in the S curve, thus achieving the goal of smooth starting. The S-curve ACC/DEC time is shown in the following figure:

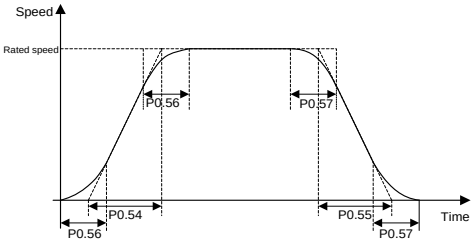

Note:

- ACC/DEC time of S curve can be used in speed mode only.
- If the speed command is analog input, S curve ACC/DEC time is invalid.
- If the setting value of P0.54 is less than that of P0.56 and P0.56 is not 0, P0.54 is equal to P0.56 during actual running.
- If the setting value of P0.55 is less than that of P0.57 and P0.57 is not 0, P0.55 is equal to P0.57 during actual running.

P0.56	**Data size**	16bit	**Data format**	DEC
	Modbus address	1112, 1113	**CANopen address**	0x2038, 0x00
P0.57	**Data size**	16bit	**Data format**	DEC
	Modbus address	1114, 1115	**CANopen address**	0x2039, 0x00

P0.58	Zero speed clamp mode	**Setting range**	**Default**	**Unit**	**Applicable mode**		
		0–3	0	-		S	T

This parameter specifies the zero speed clamp mode.

Set value	Position command mode
[0]	Invalid (The zero speed clamp input is ignored.)
1	If the zero speed clamp control signal is valid, the speed command is forcibly set to 0.
2	If the zero speed clamp control signal is valid, the speed command is forcibly set to 0, the position control mode is used when the actual motor speed becomes less than P0.59 [Speed threshold in zero speed clamp], and the servo is locked at this position. Other actions are the same with setting value 1.
3	If the zero speed clamp control signal is valid, when the speed command changes to be -10r/min below P0.59, it will switch to position control and be locked in the position.

Note:

- If any one of P3.00–P3.09 is zero speed clamp function (0x00D), it can be controlled by the corresponding digital input of CN1; it can also be controlled by P4.19.

0: Disable zero speed clamp.

1: Enable zero speed clamp.

- In the torque mode, mode 0 and 1 are valid, mode 2 and 3 are the same with mode 1.

P0.58	Data size	16bit	Data format	DEC
	Modbus address	1116, 1117	CANopen address	0x203A, 0x00

P0.59	Speed threshold of zero speed clamp	Setting range	Default	Unit	Applicable mode		
		10–20000	30	r/min		S	

This parameter specifies the speed threshold for switching to position control when P0.58 is 2 or 3. When P0.58 is 3, there is a 10 r/min delay detected.

P0.59	Data size	16bit	Data format	DEC
	Modbus address	1118, 1119	CANopen address	0x203B, 0x00

P0.60	Torque command selection	Setting range	Default	Unit	Applicable mode		
		0–3	1	-			T

This parameter specifies the command source in torque control.

Set value	Input mode	Description
0	Internal setting	Set the torque command by P0.66.
[1]	Analog input	You need to set P3.26 [Function of AI 1] or P3.27 [Function of AI 2] to 4 [Torque command] and set associated parameters according to the actual situation.
2	Bus input	The communication bus interface can be used to receive torque commands from the upper computer. If P4.10 is 1 [Bus input], the motor speed can be changed by P4.14 [Bus torque command]. See the descriptions for P4.10 and P4.14.
3	(Reserved)	-

P0.60	Data size	16bit	Data format	DEC
	Modbus address	1120, 1121	CANopen address	0x203C, 0x00

P0.61	Torque command direction setting	Setting range	Default	Unit	Applicable mode		
		0–1	0	-			T

This parameter specifies the method for specifying the direction in a torque command.

Set value	Designated method
[0]	The torque command sign specifies the direction. For example, Torque command input [+] indicates forward, while [-] indicates reverse.
1	The torque command sign [0x00F] of the digital input function is used to specify the direction. 1: forward; 0: reverse

Note: 0x00F is valid when the input is a low electrical level, while 0x10F is valid when the input is a high electrical level.

P0.61	Data size	16bit	Data format	DEC
	Modbus address	1122, 1123	CANopen address	0x203D, 0x00

P0.62	Analog input 2 gain	Setting range	Default	Unit	Applicable mode		
		0–2000	100	[P3.27 unit]/V	P	S	T

This parameter specifies the gain of analog input 2, the gain unit is associated with P3.27.

Note: Analog input 2 indicates the signal input from the analog speed/speed limit terminals (AI2 and GND, corresponding to pin 20 and pin 19) of the CN1 plug.

Application example:

1. The function of analog input 2 is torque command.
2. The voltage of analog input 2 corresponds to the conversion gain of the motor torque command.
3. When P0.60 is set to “1”, this parameter is valid.
4. The relationship between the voltage of analog input 2 and torque command is as follows:
   The torque corresponding to every 1V voltage is 10% of the rated torque by default.

Actual torque command = Analog input voltage x P0.62

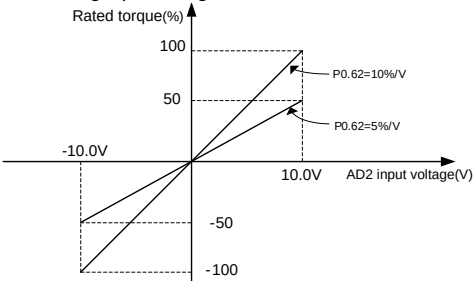

Set this parameter according to the motor working condition. If this parameter is set to a large value, the motor speed may fluctuate sharply.

P0.62	Analog input 2 gain	Setting range	Default	Unit	Applicable mode		
		0–2000	100	[P3.27 unit]/V	P	S	T
P0.62	Data size	32bit	Data format		DEC		
	Modbus address	1124, 1125	CANopen address		0x203E, 0x00		

P0.63	Reverse of AI 2	Setting range	Default	Unit	Applicable mode		
		0–1	0	-	P	S	T

This parameter specifies the voltage polarity of analog input 2.

Set value	Actual detection result	
[0]	Positive polarity	[+Voltage]→[Positive value], [-Voltage]→[Negative value]
1	Negative polarity	[+Voltage]→[Negative value], [-Voltage]→[Positive value]

P0.63	Data size	16bit	Data format	DEC
	Modbus address	1126, 1127	CANopen address	0x203F, 0x00

P0.65	Dead zone of AI 2	Setting range	Default	Unit	Applicable mode		
		0.000–3.000	0.000	V	P	S	T

If the absolute voltage value of analog input 2 falls in the range of this parameter, the corresponding command value is 0.

P0.65	Data size	16bit	Data format	DEC
	Modbus address	1130, 1131	CANopen address	0x2041, 0x00

P0.66	Internal torque command	Setting range	Default	Unit	Applicable mode		
		-500.0–500.0	0.0	%			T

This parameter specifies the internal torque reference. If the servo motor rated torque is considered as 100%, the setting of this parameter is a percentage of the servo motor rated torque.

Note:

- If the absolute value of this parameter is greater than maximum torque limit 1 (P0.10), the output torque is the setting value of P0.10 and the direction is the same as this parameter.
- In torque mode, this parameter is valid only when P0.60 is 0.

P0.66	Data size	16bit	Data format	DEC
	Modbus address	1132, 1133	CANopen address	0x2042, 0x00

P0.67	Speed limit mode	Setting range	Default	Unit	Applicable mode		
		0–1	1	-			T

This parameter specifies the speed limit mode for torque control.

Set value	Designated method
0	The analog input is selected as the speed limit source. You need to set either P3.26 [Function of AI 1] or P3.27 [Function of AI 2] to 1 [Speed limit] and set associated parameters according to the actual situation.
[1]	Select the internal speed limit and anyone of P0.46–P0.49 may be selected.

Note: The speed limit value is processed with absolute value internally. The actual sign of speed limit is the same with that of the torque command.

P0.67	Data size	16bit	Data format	DEC
	Modbus address	1134, 1135	CANopen address	0x2043, 0x00

P0.68	RAMP time of torque command	Setting range	Default	Unit	Applicable mode		
		0–10000	0	ms			T

This parameter is used to modify the planning curve when the torque command input changes. This parameter indicates the time taken to rise from 0 to 100% of the rated torque.

P0.68	Data size	16bit	Data format	DEC
	Modbus address	1136, 1137	CANopen address	0x2044, 0x00

P0.69	DEC time for quick stop	Setting range	Default	Unit	Applicable mode		
		0–10000	500	ms	P	S	T

This parameter specifies the DEC time for quick stop. It indicates the time taken to decelerate

P0.69	Data size	16bit	Data format	DEC
	Modbus address	1138, 1139	CANopen address	0x2045, 0x00

P0.70[1]	Absolute encoder mode setting	Setting range	Default	Unit	Applicable mode		
		0–1	0	-	P	S	T

This parameter specifies the running mode of the multiturn absolute encoder. Though the encoder working with the motor is a multiturn absolute encoder, it is still considered as a single-turn encoder by default. If the multiturn absolute function is needed, you need to prepare the spare battery for the encoder and set the work mode as the multiturn absolute mode.

Set value	Designated method
[0]	Single-turn absolute value
1	Multi-turn absolute value

P0.70[1]	Data size	16bit	Data format	DEC
	Modbus address	1140, 1141	CANopen address	0x2046, 0x00

P0.71*	Clear absolute encoder multiturn	Setting range	Default	Unit	Applicable mode		
		0–1	0	-	P	S	T

This parameter specifies whether to clear the multiturn data for the multiturn absolute encoder. If this function is enabled, the multiturn data is cleared while the single-turn data remains unchanged, but the absolute position in the feedback is cleared.

Note: If you use a multiturn absolute encoder, after machinery installation, you can clear the absolute encoder after detecting the absolute zero position of the mechanic system at first power-on.

P0.71*	Data size	16bit	Data format	DEC
	Modbus address	1142, 1143	CANopen address	0x2047, 0x00

6.1. 4 Control mode switching

P0.90	Max. speed limit of control mode switching	Setting range	Default	Unit	Applicable mode		
		1–1000	100	r/min	P	S	T

This parameter specifies the maximum running speed during positioning for switching from the speed or torque mode to the position mode when the hybrid of position and speed or the hybrid of position and torque is used.

P0.90	Data size	16bit	Data format	DEC
	Modbus address	1180, 1181	CANopen address	0x205A, 0x00

P0.91	Positioning reference of control mode switching	Setting range	Default	Unit	Applicable mode		
		$-1–(2^{31}-1)$	-1	pulse	P	S	T

This parameter specifies the motor position R0.14 [Rotor position relative to pulse Z] after the control mode is switched. The switching is made from the speed or torque mode to the position

P0.91	Positioning reference of control mode switching	Setting range	Default	Unit	Applicable mode		
		-1–(2^{31}-1)	-1	pulse	P	S	T

mode when the hybrid of position and speed or the hybrid of position and torque is used.

Note:

- After the control mode switching, the reference point in the received position command is the setting of this parameter. The unit of this parameter is the encoder pulse unit.
- If this parameter is set to -1 and the control mode needs to switch from speed mode to position mode, switching is executed at the current position, without positioning to the reference point.
- If the mechanical angle corresponding to the setting of P3.50 is no more than 0.5°, the positioning is accurate to ±P3.50. If the angle is greater than 0.5°, the positioning is accurate to the pulse number corresponding to ±0.5°.

P0.91	Data size	32bit	Data format	DEC
	Modbus address	1182, 1183	CANopen address	0x205B, 0x00

P0.92	Position mode switching exit mode	Setting range	Default	Unit	Applicable mode		
		0–1	0	-	P	S	T

When P0.03 is 3 or 4, this parameter is used to set the exiting mode when the position mode can be switched to other control modes.

Set value	Exiting mode
[0]	The position mode is switched to another mode after positioning is complete.
1	The position mode is immediately switched to another mode when the control mode switching command is invalid.

P0.92	Data size	32bit	Data format	DEC
	Modbus address	1184, 1185	CANopen address	0x205C, 0x00

6.2 Autotuning control (P1 group parameters)

6.2.1 Inertia identification (Automatic gain)

P1.00	Tune inertia online	Setting range	Default	Unit	Applicable mode		
		0–1	0	-	P	S	T

This parameter specifies whether to automatically tune inertia online and adjust the gain.

Set value	Meaning
[0]	Online inertia identifying is invalid.
1	Online inertia identifying is valid.

P1.00	Data size	16bit	Data format	DEC
	Modbus address	1200, 1201	CANopen address	0x2100, 0x00

P1.01	Inertia ratio 1	Setting range	Default	Unit	Applicable mode		
		0–10000	250	%	P	S	T

Rotation inertia ratio = Load inertia/Motor rotation inertia x 100%

If P1.01 is set correctly, the setting unit of P2.00 and P2.05 is Hz.

If P1.01 is greater than the actual value, the speed loop gain unit will increase, and if it is smaller than the actual value, the speed loop gain unit will decrease.

If online automatic tuning is valid, the inertia ratio is updated to P1.01 in real time and written to the EEPROM every 30 minutes.

P1.01	Data size	16bit	Data format	DEC
	Modbus address	1202, 1203	CANopen address	0x2101, 0x00

P1.02	Inertia ratio 2	Setting range	Default	Unit	Applicable mode		
		0–10000	250	%	P	S	T

The meaning of P1.02 is similar to that of P1.01.

Note: Automatic online gain adjusting is invalid for this parameter.

P1.02	Data size	16bit	Data format	DEC
	Modbus address	1204, 1205	CANopen address	0x2102, 0x00

P1.03	Machine rigidity setting	Setting range	Default	Unit	Applicable mode		
		0–31	13	-	P	S	T

A greater mechanical rigidity value indicates quicker response and high rigidity performance, but it increases the possibility to cause vibration. In stable working condition, you can set a greater value to obtain quicker response.

Mechanical structure	Rigidity setting
Large transfer or transmission equipment	0–13
Belt drive mechanism	5–16
Ball screw + belt drive	5–16
Manipulator	15–22
Direct ball screw or rigid body	18–25

P1.03	**Data size**	16bit	**Data format**	DEC
	Modbus address	1206, 1207	**CANopen address**	0x2103, 0x00

P1.04*	Tune inertia offline	**Setting range**	**Default**	**Unit**	**Applicable mode**		
		0–1	0	-	P	S	T

This parameter is used to obtain the load inertial ratio of the motor rotation inertia. After inertia identifying is enabled, the motor runs six cycles to identify inertia. In each cycle, the motor runs at the mode specified by P1.05 [Inertia identifying mode]. The maximum rotation number of the motor is determined by P1.06 [Max. rotations by inertia identifying], and the ACC command time is determined by P1.07 [ACC time for inertia identifying].

Set value	Function
[0]	Disable inertia identifying
1	Enable inertia identifying

Note:

- The motor speed is fast during identifying if P1.06 and P1.07 are set to great values.
- If the drive reports the alarm Er25-7 during identifying, see section 9.1 "Drive faults and solutions" to handle it.
- This parameter is invalid when the servo is enabled.

P1.04*	**Data size**	16bit	**Data format**	DEC
	Modbus address	1208, 1209	**CANopen address**	0x2104, 0x00

P1.05	Operation mode of inertia identification	**Setting range**	**Default**	**Unit**	**Applicable mode**		
		0–3	0	-	P	S	T

This parameter is used to set the operation mode of inertia identification.

Set value	Function
[0]	Forward rotation and then reverse rotation
1	Forward rotation
2	Reverse rotation
3	Reverse rotation and then forward rotation

P1.05	**Data size**	16bit	**Data format**	DEC
	Modbus address	1210, 1211	**CANopen address**	0x2105, 0x00

P1.06	Movable range of inertia identification	**Setting range**	**Default**	**Unit**	**Applicable mode**		
		0.2–20.0	2.0	r	P	S	T

If the inertia identification mode is valid and specified in position mode, this parameter is used to limit the maximum rotation number of the motor in each cycle.

P1.06	**Data size**	16bit	**Data format**	DEC
	Modbus address	1212, 1213	**CANopen address**	0x2106, 0x00

P1.07	ACC time constant of inertia identification	**Setting range**	**Default**	**Unit**	**Applicable mode**		
		2–1000	200	ms	P	S	T

This parameter is used to set the motor ACC time during the inertia identification. If the load inertia is heavy, the ACC time can be set to a greater value, preventing overload alarms.

P1.07	**Data size**	16bit	**Data format**	DEC
	Modbus address	1214, 1215	**CANopen address**	0x2107, 0x00

P1.08	Speed level of inertia identification	**Setting range**	**Default**	**Unit**	**Applicable mode**		
		0–3	1	-	P	S	T

This parameter is used to set the speed level of inertia identification.
A large value of this parameter indicates a quick response to the load characteristic changes, resulting in large fluctuation of the presumption value. The presumption result is saved every 30 minutes.

Set value	Function	Meaning
0	No change	Stop the presumption of load characteristics.
[1]	No major change	There is no major change to load characteristics.
2	Slow change	Load characteristics change slowly.
3	Sharp change	Load characteristics change sharply.

P1.08	**Data size**	16bit	**Data format**	DEC
	Modbus address	1216, 1217	**CANopen address**	0x2108, 0x00

6.2.2 Self-adaptive vibration control

P1.19	Resonance detection sensitivity	**Setting range**	**Default**	**Unit**	**Applicable mode**		
		0.2–100.0	5.0	%	P	S	T

This parameter is used to set the sensitivity of the automatic detection on mechanical resonance frequency. A smaller value of this parameter indicates higher sensitivity to the resonance.
Note: When the set value of P1.19 is increasing, the sensitivity to the resonance is reducing.

P1.19	**Data size**	16bit	**Data format**	DEC
	Modbus address	1238, 1239	**CANopen address**	0x2113, 0x00

P1.20	Resonance detection mode	**Setting range**	**Default**	**Unit**	**Applicable mode**		
		0–7	0	-	P	S	T

This parameter is used to set the working mode of resonance detection, resonant frequency presumed by the self-adaptive notch filter, and action after presumption.

If the function of automatically detecting the mechanical resonant frequency is valid (that is, this parameter is set to 1, 2, or 3), the system automatically collects data to conduct mechanical resonant frequency analysis and saves results to P1.21 and P1.22. You can set the notch filter frequency according to the settings of P1.21 and P1.22 to eliminate the mechanical resonance.

Note: You are recommended to disable the function after the gain adjustment is complete.

Set value	Function	Meaning
[0]	Invalid	All parameters associated with the notch filter remain unchanged.
1	One notch filter valid	The parameters associated with the third notch filter are updated according to the self-adaptive result.
2	Two notch filters valid	The parameters related to the third and fourth notch filters are updated according to the self-adaptive result.
3	Resonant frequency test mode	The mechanical resonant frequency is detected automatically but the parameters associated with notch filters are not set.
4	Clearing notch filter parameters	The parameters associated with the four notch filters are restored to the default values.
5	Notch filter 3 →Notch filter 1	The parameters of the third notch filter to are automatically copied to the first notch filter and then restored to the default values.
6	Notch filter 4 →Notch filter 2	The parameters of the fourth notch filter to are automatically copied to the first notch filter and then restored to the default values.
7	Notch filters 3 and 4 → Notch filters 1 and 2	The parameters of the third and fourth notch filters to are automatically copied to the first and second notch filters and then restored to the default values.

P1.20	**Data size**	16bit	**Data format**	DEC
	Modbus address	1240, 1241	**CANopen address**	0x2114, 0x00

P1.21*	Mechanical resonant frequency 1	Setting range	Default	Unit	Applicable mode		
		0–5000	5000	Hz	P	S	T
P1.22*	Mechanical resonant frequency 2	Setting range	Default	Unit	Applicable mode		
		0–5000	5000	Hz	P	S	T

This group of parameter displays mechanical resonant frequency. When P1.20 is set to 1, indicating mechanical resonance frequency detection is valid, the system detects the frequency of the max. resonance point and displays it by function codes.

Note:

- The measurement results are accurate only when the rotation speed reaches 30 r/min at least.
- This function is read only. You can set the notch filter frequency through this group of parameter to eliminate mechanical resonance.
- The value 5000 indicates no resonance point is found.

P1.21	Data size	16bit	Data format	DEC
	Modbus address	1242, 1243	CANopen address	0x2115, 0x00
P1.22	Data size	16bit	Data format	DEC
	Modbus address	1244, 1245	CANopen address	0x2116, 0x00

P1.23	Frequency of notch filter 1	Setting range	Default	Unit	Applicable mode		
		50–5000	5000	Hz	P	S	T

This parameter is used to set the frequency of notch filter 1 for suppressing resonance. The notch filter can simulate the mechanical resonant frequency, thus suppressing the resonant frequency. The value 5000 indicates the notch filter function is invalid.

P1.23	Data size	16bit	Data format	DEC
	Modbus address	1246, 1247	CANopen address	0x2117, 0x00

P1.24	Q factor of notch filter 1	Setting range	Default	Unit	Applicable mode		
		0.50–16.00	1.00	-	P	S	T

This parameter is used to set the Q value (quality factor) of notch filter 1.

Q factor of notch filter = Center frequency of notch filter/Bandwidth of notch filter Generally, the default value is kept.

P1.24	Data size	16bit	Data format	DEC
	Modbus address	1248, 1249	CANopen address	0x2118, 0x00

P1.25	Depth of notch filter 1	Setting range	Default	Unit	Applicable mode

		0–100	0	%	P	S	T
This parameter is used to the amplitude attenuation rate of notch filter 1. A large value of this parameter indicates low notch filter depth and small phase lag.							
P1.25	**Data size**	16bit	**Data format**	DEC			
	Modbus address	1250, 1251	**CANopen address**	0x2119, 0x00			

P1.26	Frequency of notch filter 2	**Setting range**	**Default**	**Unit**	**Applicable mode**		
		50–5000	5000	Hz	P	S	T
P1.27	Q factor of notch filter 2	**Setting range**	**Default**	**Unit**	**Applicable mode**		
		0.50–16.00	1.00	-	P	S	T
P1.28	Depth of notch filter 2	**Setting range**	**Default**	**Unit**	**Applicable mode**		
		0–100	0	%	P	S	T
These parameters are used to set characteristics of notch filer 2, similar to P1.23, P1.24, and P1.25.							
P1.26	**Data size**	16bit	**Data format**	DEC			
	Modbus address	1252, 1253	**CANopen address**	0x211A, 0x00			
P1.27	**Data size**	16bit	**Data format**	DEC			
	Modbus address	1254, 1255	**CANopen address**	0x211B, 0x00			
P1.28	**Data size**	16bit	**Data format**	DEC			
	Modbus address	1256, 1257	**CANopen address**	0x211C, 0x00			

P1.29	Frequency of notch filter 3	**Setting range**	**Default**	**Unit**	**Applicable mode**		
		50–5000	5000	Hz	P	S	T
P1.30	Q factor of notch filter 3	**Setting range**	**Default**	**Unit**	**Applicable mode**		
		0.50–16.00	1.00	-	P	S	T
P1.31	Depth of notch filter 3	**Setting range**	**Default**	**Unit**	**Applicable mode**		
		0–100	0	%	P	S	T
These parameters are used to set characteristics of notch filer 3, similar to P1.23, P1.24, and							
P1.29	**Data size**	16bit	**Data format**	DEC			
	Modbus address	1258, 1259	**CANopen address**	0x211D, 0x00			
P1.30	**Data size**	16bit	**Data format**	DEC			
	Modbus address	1260, 1261	**CANopen address**	0x211E, 0x00			
P1.31	**Data size**	16bit	**Data format**	DEC			

	Modbus address	1262, 1263	**CANopen address**	0x211F, 0x00	

P1.32	Frequency of notch filter 4	**Setting range**	**Default**	**Unit**	**Applicable mode**		
		50–5000	5000	Hz	P	S	T
P1.33	Q factor of notch filter 4	**Setting range**	**Default**	**Unit**	**Applicable mode**		
		0.50–16.00	1.00	-	P	S	T
P1.34	Depth of notch filter 4	**Setting range**	**Default**	**Unit**	**Applicable mode**		
		0–100	0	%	P	S	T

These parameters are used to set characteristics of notch filer 4, similar to P1.23, P1.24, and P1.25.

P1.32	**Data size**	16bit	**Data format**	DEC
	Modbus address	1264, 1265	**CANopen address**	0x2120, 0x00
P1.33	**Data size**	16bit	**Data format**	DEC
	Modbus address	1266, 1267	**CANopen address**	0x2121, 0x00
P1.34	**Data size**	16bit	**Data format**	DEC
	Modbus address	1268, 1269	**CANopen address**	0x2122, 0x00

P1.35	Vibration control mode in position command	**Setting range**	**Default**	**Unit**	**Applicable mode**		
		0–2	0	-	P		

This parameter is used to set the switching mode of the filter used for vibration control.

Set value	Function
[0]	Vibration control by filter 1 is valid.
1	Filter 1 and filter 2 are switched according to VS-SEL.
2	Automatic

Note: If a digital input terminal is used for selection, one of parameters P3.00–P3.09 must be set to 0x11C or 0x01C (according to VS-SEL).

The relationship with COM- is as follows:

0: OFF (The internal optical coupler corresponding to the input is not conducted.)

1: ON (The internal optical coupler corresponding to the input is conducted.)

P1.35	**Data size**	16bit	**Data format**	DEC
	Modbus address	1270, 1271	**CANopen address**	0x2123, 0x00

P1.36	Vibration control	**Setting range**	**Default**	**Unit**	**Applicable mode**

	frequency 1	0.0–200.0	0.0	Hz	P		

This parameter is used to set the frequency point at which the vibration at the load peak is suppressed.

Note: The set frequency must range from 1.0 Hz to 200.0 Hz. It is invalid if the setting value is below 1.0Hz.

P1.36	**Data size**	16bit	**Data format**	DEC
	Modbus address	1272, 1273	**CANopen address**	0x2124, 0x00

P1.37	Coefficient of vibration control filter 1	**Setting range**	**Default**	**Unit**	**Applicable mode**		
		0.00–1.00	1.00	-	P		

This parameter is used to set the coefficient of the first vibration control filter.

P1.37	**Data size**	16bit	**Data format**	DEC
	Modbus address	1274, 1275	**CANopen address**	0x2125, 0x00

P1.38	Vibration control frequency 2	**Setting range**	**Default**	**Unit**	**Applicable mode**		
		0.0–200.0	0.0	Hz	P		
P1.39	Coefficient of vibration control filter 2	**Setting range**	**Default**	**Unit**	**Applicable mode**		
		0.00–1.00	1.00	-	P		

These parameters are used to set characteristics of the second vibration control filter, similar to P1.36 and P1.37.

P1.38	**Data size**	16bit	**Data format**	DEC
	Modbus address	1276, 1277	**CANopen address**	0x2126, 0x00
P1.39	**Data size**	16bit	**Data format**	DEC
	Modbus address	1278, 1279	**CANopen address**	0x2127, 0x00

6.3 Motor control parameters (P2 group)

6.3.1 Gain setting

P2.00	1st speed gain	**Setting range**	**Default**	**Unit**	**Applicable mode**		
		0.0–3276.7	27.0	Hz	P	S	T

The speed loop responsiveness of the servo system is determined by the speed gain. Increasing this parameter improves the speed response, but it increases the possibility to cause vibration and noise.

Note: If the inertia ratio is set correctly, the unit of P2.00 is Hz.

P2.00	**Data size**	16bit	**Data format**	DEC

	Modbus address	1400, 1401	CANopen address	0x2200, 0x00

P2.01	1st speed integral time constant	Setting range	Default	Unit	Applicable mode		
		0.1–1000.0	21.0	ms	P	S	T

This parameter is used to set the integral time constant of the speed loop. A smaller value of this parameter indicates quicker response, but it increases the possibility to cause vibration and noise. It should be noted particularly that when this parameter is set to 1000, it means the integral action is invalid.

P2.01	Data size	16bit	Data format	DEC
	Modbus address	1402, 1403	CANopen address	0x2201, 0x00

P2.02	1st position gain	Setting range	Default	Unit	Applicable mode		
		0.0–3276.7	48.0	1/s	P		

The position loop responsiveness of the servo system is determined by the position gain. A smaller value of this parameter indicates quicker response, but it increases the possibility to cause vibration and noise.

P2.02	Data size	16bit	Data format	DEC
	Modbus address	1404, 1405	CANopen address	0x2202, 0x00

P2.03	1st speed detection filter	Setting range	Default	Unit	Applicable mode		
		100–5000	5000	Hz	P	S	T

This parameter is used to set 1st speed detection filter.

Note: The value 5000 indicates no filtering. A smaller value of this parameter indicates lower motor noise and speed fluctuation, but it slows down the responsiveness.

P2.03	Data size	16bit	Data format	DEC
	Modbus address	1406, 1407	CANopen address	0x2203, 0x00

P2.04	1st torque filter	Setting range	Default	Unit	Applicable mode		
		0.00–25.00	0.84	ms	P	S	T

This parameter is used to set the time constant of the torque filter.

P2.04	Data size	16bit	Data format	DEC
	Modbus address	1408, 1409	CANopen address	0x2204, 0x00

P2.05	2st speed gain	Setting range	Default	Unit	Applicable mode		
		0.0–3276.7	27.0	Hz	P	S	T
P2.06	2st speed integral time	Setting range	Default	Unit	Applicable mode		

	constant	0.1–1000.0	1000.0	ms	P	S	T
P2.07	2st position gain	**Setting range**	**Default**	**Unit**	**Applicable mode**		
		0.0–3276.7	57.0	1/s	P		
P2.08	2st speed detection filter	**Setting range**	**Default**	**Unit**	**Applicable mode**		
		100–5000	5000	Hz	P	S	T
P2.09	2st torque filter	**Setting range**	**Default**	**Unit**	**Applicable mode**		
		0.00–25.00	0.84	ms	P	S	T

There are two groups of parameters respectively for position gain, speed gain, speed integral time constant, speed detection filter, and torque filter.

The definition of the function and content are the same with those of 1st group.

You can select or switch between 1st gain and 2nd gain as needed. For details, see the descriptions for P2.20–P2.34.

P2.05	**Data size**	16bit	**Data format**	DEC
	Modbus address	1410, 1411	**CANopen address**	0x2205, 0x00
P2.06	**Data size**	16bit	**Data format**	DEC
	Modbus address	1412, 1413	**CANopen address**	0x2206, 0x00
P2.07	**Data size**	16bit	**Data format**	DEC
	Modbus address	1414, 1415	**CANopen address**	0x2207, 0x00
P2.08	**Data size**	16bit	**Data format**	DEC
	Modbus address	1416, 1417	**CANopen address**	0x2208, 0x00
P2.09	**Data size**	16bit	**Data format**	DEC
	Modbus address	1418, 1419	**CANopen address**	0x2209, 0x00

P2.10	Speed feed-forward gain	**Setting range**	**Default**	**Unit**	**Applicable mode**		
		0.0–100.0	0.0	%	P		

This parameter is used to set the speed feed-forward gain. If it is set to 100%, residual pulses are almost zero when the motor runs at a stable speed, but overshooting increases at sudden ACC/DEC.

P2.10	**Data size**	16bit	**Data format**	DEC
	Modbus address	1420, 1421	**CANopen address**	0x220A, 0x00

P2.11	Speed feed-forward filter time	**Setting range**	**Default**	**Unit**	**Applicable mode**		
		0.00–64.00	0.50	ms	P		

This parameter is used to set the speed feed-forward filter time.				
P2.11	**Data size**	16bit	**Data format**	DEC
	Modbus address	1422, 1423	**CANopen address**	0x220B, 0x00

P2.12	Torque feed-forward gain	**Setting range**	**Default**	**Unit**	**Applicable mode**		
		0.0–100.0	0.0	%	P	S	
This parameter is used to set the torque feed-forward gain. After the torque is calculated according to the speed control command, the torque multiplied by the setting of this parameter is added to the torque command from speed control. Increasing the torque feed-forward gain can improve response performance in ACC/DEC and reduce position deviation.							
P2.12	**Data size**	16bit	**Data format**	DEC			
	Modbus address	1424, 1425	**CANopen address**	0x220C, 0x00			

P2.13	Torque feed-forward filter time	**Setting range**	**Default**	**Unit**	**Applicable mode**		
		0.00–64.00	0.00	ms	P	S	
This parameter is used to set the torque feed-forward filter time.							
P2.13	**Data size**	16bit	**Data format**	DEC			
	Modbus address	1426, 1427	**CANopen address**	0x220D, 0x00			

P2.14	1st IPPI coefficient	**Setting range**	**Default**	**Unit**	**Applicable mode**		
		0–1000	100	%	P	S	T
This parameter is used to set 1st IPPI coefficient. **Note:** IP control is applied when it is set to 0, while PI control is applied when it is set to 100.							
P2.14	**Data size**	16bit	**Data format**	DEC			
	Modbus address	1428, 1429	**CANopen address**	0x220E, 0x00			

P2.15	2nd IPPI coefficient	**Setting range**	**Default**	**Unit**	**Applicable mode**		
		0–1000	100	%	P	S	T
This parameter is used to set 2nd IPPI coefficient. **Note:** IP control is applied when it is set to 0, while PI control is applied when it is set to 100.							
P2.15	**Data size**	16bit	**Data format**	DEC			
	Modbus address	1430, 1431	**CANopen address**	0x220F, 0x00			

6.3.2 Gain switching

P2.20	2nd gain setting	**Setting range**	**Default**	**Unit**	**Applicable mode**

		0–1	1	-	P	S	T

This parameter specifies the proper adjustment for gain switching.

Set value	Exiting mode
0	1st gain is fixed. The speed loop action is switched to the PI or P action based on the gain switching input (that is, the digital input is configured as function gain switching, corresponding to 0x006) or P4.16 [Gain switching command]. Gain switching invalid → PI action Gain switching valid → P action **Note:** 0x006 is valid when the digital inputs a low electrical level, while 0x106 is valid when the digital inputs a high electrical level.
[1]	Switching between 1st gain [P2.00–P2.04] and 2nd gain [P2.05–P2.09] is valid.

P2.20	Data size	16bit	Data format	DEC
	Modbus address	1440, 1441	CANopen address	0x2214, 0x00

P2.22	Switching trigger in position control	Setting range	Default	Unit	Applicable mode		
		0–9	0	-	P		

This parameter is used to set the trigger condition of gain switching in position control or fully-closed loop control.

Set value	Switching condition	Gain switching condition
[0]	1st gain fixed	Be fixed in 1st gain [P2.00–P2.04]
1	2nd gain fixed	Be fixed in 2nd gain [P2.05–P2.09]
2	Switching input with gain	Invalid: 1st gain Valid: 2nd gain
3	Large torque command	In the previous 1st gain, if the absolute value of torque command exceed (level+delay) [0.1%], it will switch to 2nd gain. In the previous 2nd gain, if the absolute value of torque command keeps below (level-delay) [0.1%] in the delay time, it will return to 1st gain.
4	Large speed command	In the previous 1st gain, if the absolute value of speed command exceed (level+delay) [r/min], it will switch to 2nd gain. In the previous 2nd gain, if the absolute value of speed command keeps below (level-delay) [r/min] in the delay time, it will return to 1st gain.

5	Large position deviation	In the previous 1st gain, if the absolute value of position deviation exceed (level+delay) [pulse], it will switch to 2nd gain. In the previous 2nd gain, if the absolute value of position deviation keeps below (level-delay) [pulse] in the delay time, it will return to 1st gain. **Note:** The unit of level and lag [pulse] acts as encoder resolution unit during position control and as linear encoder resolution unit during fully-closed loop control.
6	With position command	In the previous 1st gain, if the position command is not 0, it will switch to 2nd gain. In the previous 2nd gain, if the 0 position command lasts in the delay time, it will return to 1st gain.
7	Positioning not finished	In the previous 1st gain, if the positioning is not finished, it will switch to 2nd gain. In the previous 2nd gain, if the state of positioning finished lasts in the delay time, it will return to 1st gain.
8	Large actual speed	In the previous 1st gain, if the absolute value of the actual speed exceed (level+delay) [r/min], it will switch to 2nd gain. In the previous 2nd gain, if the absolute value of the actual speed keeps below (level-delay) [r/min] and such state in the delay time, it will return to 1st gain.
9	With position command+actual speed	In the previous 1st gain, if the position command is not 0, it will switch to 2nd gain. In the previous 2nd gain, if the 0 position command lasts in the delay time and the absolute value of actual speed is below (level-delay) [r/min], it will return to 1st gain.

P2.22	**Data size**	16bit	**Data format**	DEC
	Modbus address	1444, 1445	**CANopen address**	0x2216, 0x00

P2.23	Switching delay in position control	**Setting range**	**Default**	**Unit**	**Applicable mode**		
		0–10000	0	ms	P		

In the position control, if set P2.22 to 3–9, when switching from 2nd gain to 1st gain, it is the time from meeting the trigger conditions to the actual switching.

P2.23	**Data size**	16bit	**Data format**	DEC
	Modbus address	1446, 1447	**CANopen address**	0x2217, 0x00

P2.24	Switching level in position control	Setting range	Default	Unit	Applicable mode		
		0–20000	0	Based on mode	P		

In the position control, if set P2.22 to 3–5, 8, 9, it is necessary to set triggering condition of gain switching. The unit will vary with the switching mode and setting.

Note: Please set the level ≥ the delay

P2.24	Data size	16bit	Data format	DEC
	Modbus address	1448, 1449	CANopen address	0x2218, 0x00

P2.25	Switching delay in position control	Setting range	Default	Unit	Applicable mode		
		0–20000	0	Based on mode	P		

In the position control, if set P2.22 to 3–5, 8, 9, it is necessary to set switching conditions. The unit will vary with the switching mode and setting.

Note: Set the level<the delay, in the actual internal application, the delay=the level

P2.25	Data size	16bit	Data format	DEC
	Modbus address	1450, 1451	CANopen address	0x2219, 0x00

P2.26	Position gain switching time	Setting range	Default	Unit	Applicable mode		
		0–10000	0	ms	P		

In position control, if the difference between P2.00 and P2.04 is great, you can set this parameter to control the torque change and vibration caused by the switching from the small gain to the large gain at the current position. This parameter is invalid when the position gain is switched from a large value to a small one, and the switching takes effect immediately.

P2.26	Data size	16bit	Data format	DEC
	Modbus address	1452, 1453	CANopen address	0x221A, 0x00

P2.27	Switching mode of speed control	Setting range	Default	Unit	Applicable mode		
		0–5	0	-		S	

The trigger conditions of gain switching during speed control are as below:

Set value	Switching condition	Gain switching condition
[0]	1nd gain fixed	Be fixed in 1nd gain [P2.00–P2.04]
1	2nd gain fixed	Be fixed in 2nd gain [P2.05, P2.06, P2.08, P2.09]
2	Switching input with gain	Invalid: 1st gain Valid: 2nd gain
3	Torque command	In the previous 1st gain, if the absolute value of torque command exceed (level+delay) [0.1%], it will switch to 2nd gain. In the previous 2nd gain, if the absolute value of torque command keeps below (level-delay) [0.1%] in the delay time, it will return to 1st gain.
4	Speed command variable	In previous 1st gain, if the absolute value of speed command variable exceed (level+delay) [10r/min/s], it will switch to 2nd gain. In the previous 2nd gain, if the absolute value of the speed command variable keeps below (level-delay) [10r/min/s] in the delay time, it will return to 1st gain.
5	Speed command	In the previous 1st gain, if the absolute value of speed command exceed (level+delay) [r/min], it will switch to 2nd gain. In the previous 2nd gain, if the absolute value of speed command keeps below (level-delay) [r/min] in the delay time, it will return to 1st gain.

Note: The parameter is invalid for the position gain. The actual position gain is always 1st gain.

P2.27	**Data size**	16bit	**Data format**	DEC
	Modbus address	1454, 1455	**CANopen address**	0x221B, 0x00

P2.28	Switching delay in position control	**Setting range**	**Default**	**Unit**	**Applicable mode**		
		0–10000	0	ms		S	

In the speed control, if set P2.27 to 3–5, when switching from 2nd gain to 1st gain, it is the time from meeting the trigger conditions to the actual switching.

P2.28	**Data size**	16bit	**Data format**	DEC
	Modbus address	1456, 1457	**CANopen address**	0x221C, 0x00

P2.29	Switching level of speed control	**Setting range**	**Default**	**Unit**	**Applicable mode**		
		0–20000	0	Based on mode		S	

In the speed control, if set P2.27 to 3–5, it is necessary to set triggering condition of gain switching. The unit will vary with the switching mode and setting.

Note: Please set the level ≥ the delay.

P2.29	**Data size**	16bit	**Data format**	DEC
	Modbus address	1458, 1459	**CANopen address**	0x221D, 0x00

P2.30	Switching delay in speed control	**Setting range**	**Default**	**Unit**	**Applicable mode**		
		0–20000	0	Based on mode		S	

In the speed control, if set P2.27 to 3–5, it is necessary to set switching conditions. The unit will vary with the switching mode and setting.

Note: Set the level<the delay, in the actual internal application, the delay=the level

P2.30	**Data size**	16bit	**Data format**	DEC
	Modbus address	1460, 1461	**CANopen address**	0x221E, 0x00

P2.31	Switching mode of torque control	**Setting range**	**Default**	**Unit**	**Applicable mode**		
		0–3	0	-			T

The trigger conditions of gain switching during torque control are as below:

Set value	**Switching condition**	**Gain switching condition**
[0]	1st gain fixed	Be fixed in 1st gain [P2.00–P2.04]
1	2nd gain fixed	Be fixed in 2nd gain [P2.05, P2.06, P2.08, P2.09]
2	Switching input with gain	Invalid: 1st gain Valid: 2nd gain
3	Torque command	In the previous 1st gain, if the absolute value of torque command exceed (level+delay) [0.1%], it will switch to 2nd gain. In the previous 2nd gain, if the absolute value of torque command keeps below (level-delay) [0.1%] in the delay time, it will return to 1st gain.

Note: The parameter is invalid for the position gain. The actual position gain is always 1st gain.

P2.31	**Data size**	16bit	**Data format**	DEC
	Modbus address	1462, 1463	**CANopen address**	0x221F, 0x00

P2.32	Switching delay in torque control	**Setting range**	**Default**	**Unit**	**Applicable mode**		
		0–10000	0	ms			T

In the torque control, if set P2.31 to 3, when switching from 2nd gain to 1st gain, it is the time from meeting the trigger conditions to the actual switching.

P2.32	**Data size**	16bit	**Data format**	DEC
	Modbus address	1464, 1465	**CANopen address**	0x2220, 0x00

		Setting range	**Default**	**Unit**	**Applicable mode**		
P2.33	Switching level of torque control	0–20000	0	Based on mode			T

In the torque control, if set P2.31 to 3, it is necessary to set triggering condition of gain switching. The unit will vary with the switching mode and setting.

Note: Please set the level ≥ the delay

P2.33	**Data size**	16bit	**Data format**	DEC
	Modbus address	1466, 1467	**CANopen address**	0x2221, 0x00

		Setting range	**Default**	**Unit**	**Applicable mode**		
P2.34	Switching delay in torque control	0–20000	0	Based on mode			T

In the torque control, if set P2.31 to 3, it is necessary to set switching condition. The unit will vary with the switching mode and setting.

Note: Set the level<the delay, in the actual internal application, the delay=the level

P2.34	**Data size**	16bit	**Data format**	DEC
	Modbus address	1468, 1469	**CANopen address**	0x2222, 0x00

6.3.3 Special motor control

		Setting range	**Default**	**Unit**	**Applicable mode**		
P2.41[2]	Disturbance observer	0–2	0	-	P	S	T

This parameter specifies whether the disturbance observer is valid.

Set value	**Function**
[0]	Invalid
1	Disturbance observation
2	Disturbance compensation

P2.41[2]	**Data size**	16bit	**Data format**	DEC
	Modbus address	1482, 1483	**CANopen address**	0x2229, 0x00

P2.42	Disturbance observer compensation gain	Setting range	Default	Unit	Applicable mode		
		0–100	0	%	P	S	

This parameter specifies the compensation gain for disturbance torque. This parameter is used to set the compensation gain of disturbance torque. Increasing the gain may improve the effect of suppressing disturbance impact but the noise may enhanced. This parameter needs to be used with P2.43 to find the best setting point. After setting P2.43, please increase the set value of P2.42.

P2.42	Data size	16bit	Data format	DEC
	Modbus address	1484, 1485	CANopen address	0x222A, 0x00

P2.43	Disturbance observer cut-off frequency	Setting range	Default	Unit	Applicable mode		
		0–3000	200	Hz	P	S	

This parameter is used to set the cut-off frequency of disturbance observer. Decreasing the set value can downgrade the noise, while increasing the setting may decrease the disturbance torque compensation delay. This parameter needs to be used with P2.42.

P2.43	Data size	16bit	Data format	DEC
	Modbus address	1486, 1487	CANopen address	0x222B, 0x00

P2.44	Torque command offset	Setting range	Default	Unit	Applicable mode		
		-500.0–500.0	0.0	%	P	S	T

This parameter is used to set the changeable load compensation which is added to the torque command. It is usually be used in the vertical shaft application scenario, which excludes the torque control mode.

P2.44	Data size	16bit	Data format	DEC
	Modbus address	1488, 1489	CANopen address	0x222C, 0x00

P2.50[2]	Fully-closed loop vibration suppressor	Setting range	Default	Unit	Applicable mode		
		0–2	0	-			

This parameter specifies whether the speed observer is valid.

Set value	Function
[0]	Invalid
1	Disturbance observation
2	Disturbance compensation

P2.50[2]	Data size	16bit	Data format	DEC

	Modbus address	1500, 1501	**CANopen address**	0x2232, 0x00

P2.51	Fully-closed loop vibration suppressor cut-off frequency	**Setting range**	**Default**	**Unit**	**Applicable mode**		
		1.0–500.0	100.0	Hz			
This parameter is used to set the cut-off frequency of fully-closed loop vibration suppressor.							
P2.51	**Data size**	16bit	**Data format**	DEC			
	Modbus address	1502, 1503	**CANopen address**	0x2233, 0x00			

P2.52	Fully-closed loop vibration suppressor compensation gain	**Setting range**	**Default**	**Unit**	**Applicable mode**		
		0–1000	0	%			
This parameter is used to set the compensation gain of fully-closed loop vibration suppressor.							
P2.52	**Data size**	16bit	**Data format**	DEC			
	Modbus address	1504, 1505	**CANopen address**	0x2234, 0x00			

P2.53	Medium frequency vibration control switch	**Setting range**	**Default**	**Unit**	**Applicable mode**		
		0–1	0	-	P	S	T

This parameter specifies whether the medium frequency vibration control is valid.

Set value	Function
[0]	Invalid
1	Valid

P2.53	**Data size**	16bit	**Data format**	DEC
	Modbus address	1506, 1507	**CANopen address**	0x2235, 0x00

P2.54	Medium frequency vibration control frequency	**Setting range**	**Default**	**Unit**	**Applicable mode**		
		1–2000	100	Hz	P	S	T
This parameter specifies the frequency for medium frequency vibration control.							
P2.54	**Data size**	16bit	**Data format**	DEC			
	Modbus address	1508, 1509	**CANopen address**	0x2236, 0x00			

P2.55	Inertia fine tuning of medium frequency vibration control	**Setting range**	**Default**	**Unit**	**Applicable mode**		
		1–1000	100	%	P	S	T

This parameter specifies the inertia adjustment for medium frequency vibration control.
The default value 100% indicates that no inertia adjustment is performed for medium frequency vibration control.

P2.55	**Data size**	16bit	**Data format**	DEC

	Modbus address	1510, 1511	**CANopen address**	0x2237, 0x00

P2.56	Attenuation gain of medium frequency vibration control	**Setting range**	**Default**	**Unit**	**Applicable mode**		
		0–1000	0	%	P	S	T

This parameter specifies the attenuation gain for medium frequency vibration control.

The default value 0 indicates that there is no attenuation effect on medium frequency vibration control. You can set this parameter based on the actual commissioning result. Ideally, if this parameter is set to 100%, the medium frequency vibration is controlled completely.

P2.56	**Data size**	16bit	**Data format**	DEC
	Modbus address	1512, 1513	**CANopen address**	0x2238, 0x00

P2.57	Fine tuning of medium frequency vibration control filter time 1	**Setting range**	**Default**	**Unit**	**Applicable mode**		
		-10–10	0	0.01ms	P	S	T

This parameter is used to set the fine tuning of medium frequency vibration control filter time 1, which can be calculated automatically based on P2.54 [medium frequency vibration control frequency]. You can carry out fine tuning via this parameter.

P2.57	**Data size**	16bit	**Data format**	DEC
	Modbus address	1514, 1515	**CANopen address**	0x2239, 0x00

P2.58	Fine tuning of medium frequency vibration control filter time 2	**Setting range**	**Default**	**Unit**	**Applicable mode**		
		-10–10	0	0.01ms	P	S	T

This parameter is used to set the fine tuning of medium frequency vibration control filter time 2, which can be calculated automatically based on P2.54 [medium frequency vibration control frequency]. You can carry out fine tuning via this parameter.

P2.58	**Data size**	16bit	**Data format**	DEC
	Modbus address	1516, 1517	**CANopen address**	0x223A, 0x00

P2.60[2]	Speed observer	**Setting range**	**Default**	**Unit**	**Applicable mode**		
		0–2	0	-	P	S	T

This parameter specifies whether the speed observer is valid.

Set value	**Function**
[0]	Invalid
1	Speed observation
2	Speed observation

P2.60[2]	Data size	16bit	Data format	DEC
	Modbus address	1520, 1521	CANopen address	0x223C, 0x00

P2.61	Speed observer gain	Setting range	Default	Unit	Applicable mode		
		1–1000	100	Hz	P	S	T
This parameter is used to set the gain of the speed observer. Increasing the setting value may increase the response speed of the actual speed, but the vibration and noise may be raised too.							
P2.61	Data size	16bit	Data format	DEC			
	Modbus address	1522, 1523	CANopen address	0x223D, 0x00			

P2.70	Friction compensation cut-off speed	Setting range	Default	Unit	Applicable mode		
		0–1000	20	r/min	P	S	
This parameter is used to set the cut-off speed of friction compensation.							
P2.70	Data size	16bit	Data format	DEC			
	Modbus address	1540, 1541	CANopen address	0x2246, 0x00			

P2.71	Positive torque coefficient of friction compensation	Setting range	Default	Unit	Applicable mode		
		0.0–100.0	0.0	%/(10r/min)	P	S	
This parameter is used to set the friction compensation value added to torque command when a forward position command or speed command is received.							
P2.71	Data size	16bit	Data format	DEC			
	Modbus address	1542, 1543	CANopen address	0x2247, 0x00			

P2.72	Negative torque coefficient of friction compensation	Setting range	Default	Unit	Applicable mode		
		-100.0–0.0	0.0	%/(10r/min)	P	S	
This parameter is used to set the friction compensation value added to torque command when a negative position command or speed command is received.							
P2.72	Data size	16bit	Data format	DEC			
	Modbus address	1544, 1545	CANopen address	0x2248, 0x00			

P2.73	Friction compensation	Setting range	Default	Unit	Applicable mode		
		0–1	0	-	P	S	

This parameter specifies whether friction compensation is valid.

Set value	Function
[0]	Invalid
1	Friction compensation

P2.73	**Data size**	16bit	**Data format**	DEC
	Modbus address	1546, 1547	**CANopen address**	0x2249, 0x00

		Setting range	**Default**	**Unit**	**Applicable mode**		
P2.85	Torque feed-forward selection	0–1	0	-	P	S	T

This parameter is used to set the torque feed-forward selection.

Set value	Function
[0]	Speed command feed-forward
1	Position command feed-forward

P2.85	**Data size**	16bit	**Data format**	DEC
	Modbus address	1570, 1571	**CANopen address**	0x2255, 0x00

6.4 I/O management parameters (P3 group)

6.4.1 Digital input/output

		Setting range	**Default**	**Unit**	**Applicable mode**		
P3.00[1]	Input configuration of digital input 1	0x000–0x136	0x003	-	P	S	T

This parameter specifies the input of digital 1. It is in the hexadecimal format.

In the expression of 0x*——, * indicates the valid mode, the value 0 indicates the input is valid when the optical coupler is conductive, while the value 1 indicates the input is valid when the optical coupler is not conductive.

In the expression of 0x—**, ** indicate the function settings. The detailed function settings are listed in the following.

Signal	Symbol	Set value		Applicable mode		
		Valid when optical coupler not conducted	Valid when optical coupler conducted			
Invalid	—	0x100	0x000	P	S	T
Positive direction drive disabled	POT	0x101	0x001	P	S	T

Negative direction drive disabled	NOT	0x102	0x002	P	S	T
Servo enabling	SON	0x103	0x003	P	S	T
Alarm clearing	CLA	0x104	0x004	P	S	T
Control mode switchover	MCH	x105	0x005	P	S	T
Gain switchover	PLC	0x106	0x006	P	S	T
Clearing residual pulses	RPC	0x107	0x007	P		
Command pulse disabled	LL	0x108	0x008	P		
Torque limit switching	TLC	0x109	0x009	P	S	
Internal speed command 1	SPD1	0x10A	0x00A		S	T
Internal speed command 2	SPD2	0x10B	0x00B		S	T
Internal speed command 3	SPD3	0x10C	0x00C		S	
Zero-speed clamp	ZRS	0x10D	0x00D		S	T
Speed command sign	S-SIGN	0x10E	0x00E		S	
Torque command sign	T-SIGN	0x10F	0x00F			T
Internal position command 1	OS1	0x110	0x010	P		
Internal position command 2	OS2	0x111	0x011	P		
Internal position command 3	POS3	0x112	0x012	P		
Internal position command 4	POS4	0x113	0x013	P		
External fault	EXT	0x114	0x014	P	S	T
Inertia ratio switchover	JC	0x115	0x015	P	S	T
Emergency stop	EMG	x116	0x016	P	S	T
HOME switch input	HOME	0x117	0x017	P		
Triggering homing	HTRG	0x118	0x018	P		
Numerator 1 of electric gear ratio	SC1	0x119	0x019	P		
Numerator 2 of electric gear ratio	SC2	0x11A	0x01A	P		
PTP control trigger	TRIG	0x11B	0x01B	P		
Input switchover for vibration suppression	VS-SEL	0x11C	0x01C	P		
Quick stop	Q-STOP	0x11D	0x01D	P	S	T

PTP control stop	PTP-ST	0x11E	x01E	P		
Absolute position clearing	PCLR	0x11F	0x01F	P		
Internal position command 5	POS5	0x120	0x020	P		
Internal position command 6	P S6	0x121	0x021	P		
Internal position command 7	POS7	0x122	0x022	P		
Forward jogging	FJOG	0x123	0x023	P		
Reverse jogging	RJOG	0x124	0x024	P		
High/low speed switching of jogging	JOGC	0x125	0x025	P		
(Reserved)	/	0x126	0x026			
(Reserved)	/	0x127	x027			
(Reserved)	/	0x128	0x028			
(Reserved)	/	0x129	0x029			
(Reserved)	/	0x12A	0x02			
(Reserved)	/	0x12B	0x02B			
Terminal JOG enabling	DJOG	0x12C	0x02C	P		
Gantry synchronization input clear	GIN	0x12D	0x02D	P		
Master gantry synchronization alignment sensor	GSM	0x12E	0x02E	P		
Slave gantry synchronization alignment sensor	GSS	0x12F	0x02F	P		
Dynamic braking relay feedback	DBS	0x130	0x030	P		T
Manual and automatic switching of turret	DAT	0x131	0x031	P		
Forward jogging of turret	DFJ	0x132	0x032	P		
Reverse jogging of turret	DR	0x133	0x033	P		
Magnetic pole detection	PDET	0x134	0x034	P	S	T
PTP terminal pause	PSTOP	0x135	0x035	P		
EzJOG terminal pause	ESTOP	0x136	0x036	P		

Note: The default values indicate the functions applied in position mode.

P3.00[1]	**Data size**	16bit	**Data format**	HEX
	Modbus address	1600, 1601	**CANopen address**	0x2300, 0x00

P3.01[1]	Input configuration of digital 2	**Setting range**	**Default**	**Unit**	**Applicable mode**		
		0x000–0x136	0x00D	-	P	S	T
P3.02[1]	Input configuration of digital input 3	**Setting range**	**Default**	**Unit**	**Applicable mode**		
		0x000–0x136	0x004	-	P	S	T
P3.03[1]	Input configuration of digital 4	**Setting range**	**Default**	**Unit**	**Applicable mode**		
		0x000–0x136	0x016	-	P	S	T
P3.04[1]	Input configuration of digital 5	**Setting range**	**Default**	**Unit**	**Applicable mode**		
		0x000–0x136	0x019	-	P	S	T
P3.05[1]	Input configuration of digital 6	**Setting range**	**Default**	**Unit**	**Applicable mode**		
		0x000–0x136	0x01A	-	P	S	T
P3.06[1]	Input configuration of digital 7	**Setting range**	**Default**	**Unit**	**Applicable mode**		
		0x000–0x136	0x001	-	P	S	T
P3.07[1]	Input configuration of digital 8	**Setting range**	**Default**	**Unit**	**Applicable mode**		
		0x000–0x136	0x002	-	P	S	T
P3.08[1]	Input configuration of digital 9	**Setting range**	**Default**	**Unit**	**Applicable mode**		
		0x000–0x136	0x007	-	P	S	T
P3.09[1]	Input configuration of digital 10	**Setting range**	**Default**	**Unit**	**Applicable mode**		
		0x000–0x136	0x008	-	P	S	T

These parameters are used to set the input functions for digitals 2 to 10. These parameters are in the hexadecimal format.

The setting method is the same as P3.00.

Note: The default values indicate the functions applied in position mode.

P3.01[1]	**Data size**	16bit	**Data format**	HEX
	Modbus address	1602, 1603	**CANopen address**	0x2301, 0x00
P3.02[1]	**Data size**	16bit	**Data format**	HEX
	Modbus address	1604, 1605	**CANopen address**	0x2302, 0x00
P3.03[1]	**Data size**	16bit	**Data format**	HEX
	Modbus address	1606, 1607	**CANopen address**	0x2303, 0x00
P3.04[1]	**Data size**	16bit	**Data format**	HEX

	Modbus address	1608, 1609	**CANopen address**	0x2304, 0x00
P3.05[1]	**Data size**	16bit	**Data format**	HEX
	Modbus address	1610, 1611	**CANopen address**	0x2305, 0x00
P3.06[1]	**Data size**	16bit	**Data format**	HEX
	Modbus address	1612, 1613	**CANopen address**	0x2306, 0x00
P3.07[1]	**Data size**	16bit	**Data format**	HEX
	Modbus address	1614, 1615	**CANopen address**	0x2307, 0x00
P3.08[1]	**Data size**	16bit	**Data format**	HEX
	Modbus address	1616, 1617	**CANopen address**	0x2308, 0x00
P3.09[1]	**Data size**	16bit	**Data format**	HEX
	Modbus address	1618, 1619	**CANopen address**	0x2309, 0x00

P3.10[1]	Output configuration of digital 1	**Setting range**	**Default**	**Unit**	**Applicable mode**		
		0x000–0x11F	0x001	-	P	S	T

This parameter specifies the output of digital 1. It is in the hexadecimal format.

In the expression of 0x*——, * indicates the valid mode, the value 0 indicates the input is valid when the optical coupler is conductive, while the value 1 indicates the input is valid when the optical coupler is not conductive.

In the expression of 0x—**, ** indicate the function settings. The detailed function settings are listed in the following.

Signal	**Symbol**	**Set value**		**Applicable mode**		
		Valid when optical coupler not conducted	**Valid when optical coupler conducted**			
Invalid	—	0x100	0x000	P	S	T
Servo ready for output	RDY	0x101	0x001	P	S	T
Servo run output	RUN	0x102	0x002	P	S	T
Fault output	ALM	0x103	0x003	P	S	T
(Reserved)	/	0x104	0x004			
Electromagnetic brake release signal	BRK	0x105	0x005	P	S	T
Position command validity	PCMD	0x106	0x006	P		
Positioning completed	PLR	0x107	0x007	P		
Control mode switchover status	MCHS	0x108	0x008	P	S	T
Speed consistent	COIN	0x109	0x009	P	S	T

Speed reached	SR	0x10A	0x00A	P	S	T
Speed being limited	SL	0x10B	0x00B			T
Speed command validity	SCMD	0x10C	0x00C		S	
Zero output of speed	ZSO	0x10D	0x00D	P	S	T
Torque being limited	LM	0x10E	0x00E	P	S	T
Zeroing completed	HEND	0x10F	0x00F	P		
Torque reaching	TRCH	0x110	0x010			T
(Reserved)	/	0x111	0x011			
(Reserved)	/	0x112	0x012			
(Reserved)	/	0x113	0x013			
(Reserved)	/	0x114	0x014			
(Reserved)	/	0x115	0x015			
PTP arrival	PTPF	0x116	0x016	P		
PTP output 1	PTPO1	0x117	0x017	P		
PTP output 2	PTPO2	0x118	0x018	P		
PTP output 3	PTPO3	0x119	0x019	P		
PTP output 4	PTPO4	0x11A	0x01A	P		
PTP output 5	PTPO5	0x11B	0x01B	P		
PTP output 6	PTPO6	0x11C	0x01C	P		
PTP output 7	PTPO7	0x11D	0x01D	P		
Gantry synchronization output clear	GSC	0x11E	0x01E	P		
Dynamic braking relay control	DBRC	0x11F	0x01F	P	S	T

Note: The default values indicate the functions applied in position mode.

P3.10[1]	**Data size**	16bit	**Data format**	HEX
	Modbus address	1620, 1621	**CANopen address**	0x230A, 0x00

P3.11[1]	Output configuration of digital 2	**Setting range**	**Default**	**Unit**	**Applicable mode**		
		0x000–0x11F	0x003	-	P	S	T
P3.12[1]	Output configuration of digital 3	**Setting range**	**Default**	**Unit**	**Applicable mode**		
		0x000–0x11F	0x007	-	P	S	T
P3.13[1]	Output configuration of digital 4	**Setting range**	**Default**	**Unit**	**Applicable mode**		
		0x000–0x11F	0x00D	-	P	S	T

These parameters are used to set the output functions for digitals 2 to 6. These parameters are in the hexadecimal format.

The setting method is the same as P3.10.

Note: The default values indicate the functions applied in position mode.

P3.11[1]	**Data size**	16bit	**Data format**	HEX
	Modbus address	1622, 1623	**CANopen address**	0x230B, 0x00
P3.12[1]	**Data size**	16bit	**Data format**	HEX
	Modbus address	1624, 1625	**CANopen address**	0x230C, 0x00
P3.13[1]	**Data size**	16bit	**Data format**	HEX
	Modbus address	1626, 1627	**CANopen address**	0x230D, 0x00

P3.16	DI-based encoder capturing	**Setting range**	**Default**	**Unit**	**Applicable mode**		
		0–778	0	-	P	S	T

This parameter specifies the function for capturing the encoder position through the jump edge of the DI port in real time. You can check the obtained result through R1.16.

Data bit	Description	Remarks
bit0–3	Bits 0–3 = 0x1–0xA, corresponding to capturing DI1–DI10	Others are invalid.
bit8–9	Bit 8 = 1 and bit 9 = 0: Capture only through the falling edge of the DI port. Bit 8 = 0 and bit 9 = 0: Capture only through the rising edge of the DI port. Bit 8 = 1 and bit 9 = 1: Capture through both the rising edge and falling edge of the DI port.	

P3.16	**Data size**	16bit	**Data format**	DEC
	Modbus address	1632, 1633	**CANopen address**	0x2310, 0x00

6.4.2 Analog input / output adjustment

P3.20	Offset of analog input 1	**Setting range**	**Default**	**Unit**	**Applicable mode**		
		-10.000–10.000	0.000	V	P	S	T

This parameter is used to adjust analog input 1 to improve the effective accuracy of the analog input.

Due to reasons such as the zero drift of analog input devices or induced voltage in the ambient environment, the actual analog input value may deviate from the expected value, and such

deviation can be eliminated by setting the offset of AI.

See the following figure for the analog input offset voltage:

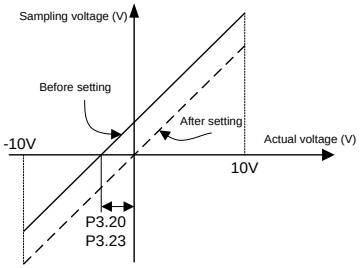

Example: After analog input 1 command terminal of the drive is connected to the analog reference signal, even if the analog reference signal is 0, the voltage value of analog input 1 (R1.05) displayed by the panel will be 0.02V, P3.20 must be set to 0.02 at this time. The drive automatically subtracts 0.02V from the analog input value received. If the analog input 2 voltage displayed by the panel is -0.02V, P3.20 must be set to -0.02. The drive automatically adds 0.02V to the analog input value received, and the value displayed by the panel changes at the same time.

P3.20	**Data size**	32bit	**Data format**	DEC
	Modbus address	1640, 1641	**CANopen address**	0x2314, 0x00

P3.21	Filter of analog input 1	**Setting range**	**Default**	**Unit**	**Applicable mode**		
		0.0–1000.0	1.0	ms	P	S	T

This parameter is used to set the time constant of the first-order low-pass filter corresponding to analog input 1. Setting this parameter can smooth the command change when the analog input changes sharply.

See the following figure.

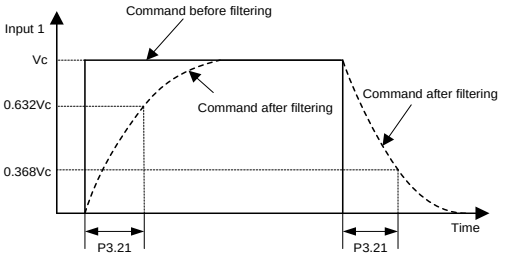

P3.21	**Data size**	16bit	**Data format**	DEC
	Modbus address	1642, 1643	**CANopen address**	0x2315, 0x00

P3.22	OV protection threshold of analog input 1	Setting range	Default	Unit	Applicable mode		
		0.000–10.000	0.000	V	P	S	T

This parameter is used to set the overvoltage protection threshold of analog input 1.

If the absolute value of R1.05 exceeds the set value of this parameter, the system reports a fault.

Note:

- The default value 0 indicates OV protection is not used.
- The setting of this parameter cannot be greater than 10V. Otherwise, the drive may be damaged.

P3.22	Data size	32bit	Data format	DEC
	Modbus address	1644, 1645	CANopen address	0x2316, 0x00

P3.23	Offset of analog input 2	Setting range	Default	Unit	Applicable mode		
		-10.000–10.000	0.000	V	P	S	T

This parameter is used to adjust analog input 2 to improve the effective accuracy of the analog input.

The setting method is the same as P3.20.

P3.23	Data size	32bit	Data format	DEC
	Modbus address	1646, 1647	CANopen address	0x2317, 0x00

P3.24	Filter of analog input 2	Setting range	Default	Unit	Applicable mode		
		0.0–1000.0	1.0	ms	P	S	T

This parameter is used to set the time constant of the first-order low-pass filter corresponding to the command. Setting this parameter can smooth the changing of actual output command when the command changes sharply.

See the following figure.

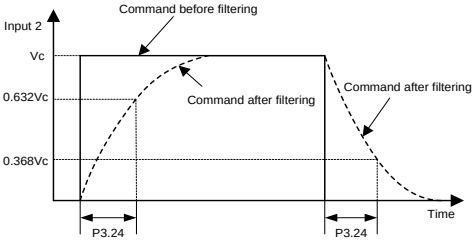

P3.24	Data size	16bit	Data format	DEC
	Modbus address	1648, 1649	CANopen address	0x2318, 0x00

P3.25	OV protection threshold of analog input 2	Setting range	Default	Unit	Applicable mode		
		0.000–10.000	0.000	V	P	S	T

This parameter is used to set the overvoltage protection threshold of analog input 2.

Note:

- The default value 0 indicates OV protection is not used.
- The setting of this parameter cannot be greater than 10V. Otherwise, the drive may be damaged.

P3.25	Data size	32bit	Data format	DEC
	Modbus address	1650, 1651	CANopen address	0x2319, 0x00

P3.26[1]	Function of analog input 1	Setting range	Default	Unit	Applicable mode		
		0–7	0	-	P	S	T
P3.27[1]	Function of analog input 2	Setting range	Default	Unit	Applicable mode		
		0–7	3	-	P	S	T

Select the analog input channel function via these parameters.

Set value	Definition	Unit
[0]	Invalid	-
1	Speed limit	r/min
2	Forward torque limit	0.1%
3	Speed command	r/min
4	Torque command	0.1%
5	Speed observation	r/min
6	Torque compensation	0.1%
7	Negative torque limit	0.1%

P3.26[1]	Data size	16bit	Data format	DEC
	Modbus address	1652, 1653	CANopen address	0x231A, 0x00
P3.27[1]	Data size	16bit	Data format	DEC
	Modbus address	1654, 1655	CANopen address	0x231B, 0x00

P3.28	Analog speed compensation gain	Setting range	Default	Unit	Applicable mode		
		0.0–100.0	0.0	%	P		

Set the analog speed compensation gain via this parameter.

P3.28	Data size	16bit	Data format	DEC
	Modbus address	1656, 1657	CANopen address	0x231C, 0x00

P3.29	Analog torque compensation gain	Setting range	Default	Unit	Applicable mode		
		0.0–100.0	0.0	%	P	S	T
Set the analog torque compensation gain via this parameter.							
P3.29	Data size	16bit	Data format	DEC			
	Modbus address	1658, 1659	CANopen address	0x231D, 0x00			

P3.30[1]	Function of analog output 1	Setting range	Default	Unit	Applicable mode		
		0–19	0	-	P	S	T
P3.32[1]	Function of analog output 2	Setting range	Default	Unit	Applicable mode		
		0–19	0	-	P	S	T

These parameters are used to select the monitoring parameters to be outputted in analog form.

Set value	Definition	Unit
[0]	Invalid	-
1	Motor speed	r/min
2	Speed of position command	r/min
3	Internal position command	pulse (encoder unit)
4	Speed command	r/min
5	Torque command	0.1%
6	Torque feedback	0.1%
7	Command position deviation	reference unit
8	Encoder position deviation	pulse (encoder unit)
9	Fully-closed loop position deviation	pulse (linear encoder unit)
10	Hybrid control deviation	reference unit
11	Main circuit DC voltage	V
12	Forward torque limit	0.1%
13	Negative torque limit	0.1%
14	Speed limit	r/min
15	Inertia ratio	%
16	Analog input 1*	V
17	Analog input 2*	V
18	Analog input 3*	V
19	Drive temperature	°C

Note: * If P3.31 and P3.33 are set to 1000, analog input 1, analog input 2 and analog input 3 can output the voltage value inputted from the analog input terminals at any time.

P3.30[1]	Data size	16bit	Data format	DEC

	Modbus address	1660, 1661	**CANopen address**	0x231E, 0x00
P3.32[1]	**Data size**	16bit	**Data format**	DEC
	Modbus address	1664, 1665	**CANopen address**	0x2320, 0x00

P3.31	Voltage gain of analog output 1	**Setting range**	**Default**	**Unit**	**Applicable mode**		
		1–214748364	1	[P3.30 unit]/V	P	S	T
P3.33	Voltage gain of analog output 2	**Setting range**	**Default**	**Unit**	**Applicable mode**		
		1–214748364	1	[P3.32 unit]/V	P	S	T

These parameters are used to set the gain of analog output. The detailed unit is relative to P3.30 and P3.32.

Example: Suppose the actual speed is outputted from the AO1 terminal, 10V corresponds to a speed of 3000r/min and 0V corresponds to 0. Then set P3.30=1, P3.31=300, the relation between the actual speed reference and output voltage is shown as below:

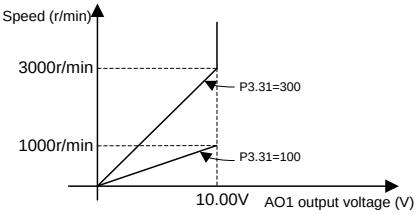

Note:

- In the example, when the actual output speed is equal to or greater than 3000r/min, AO1 output is 10V. Select proper gain according to the actual situation.
- If other functions are set for P3.30 and P3.32, the gain setting method is similar.

P3.31	**Data size**	32bit	**Data format**	DEC
	Modbus address	1662, 1663	**CANopen address**	0x231F, 0x00
P3.33	**Data size**	32bit	**Data format**	DEC
	Modbus address	1666, 1667	**CANopen address**	0x2321, 0x00

P3.34	Offset voltage of analog output 1	**Setting range**	**Default**	**Unit**	**Applicable mode**		
		-10.000–10.000	0.000	V	P	S	T
P3.35	Offset voltage of analog output 2	**Setting range**	**Default**	**Unit**	**Applicable mode**		
		-10.000–10.000	0.000	V	P	S	T

These parameters can be used to adjust the AO1 and AO2 to regulate the actual value of analog output voltage.

Actual value of analog output voltage = Original value of analog output voltage + Offset value of analog output voltage

P3.34	**Data size**	32bit	**Data format**	DEC
	Modbus address	1668, 1669	**CANopen address**	0x2322, 0x00
P3.35	**Data size**	32bit	**Data format**	DEC
	Modbus address	1670, 1671	**CANopen address**	0x2323, 0x00

P3.36[1]	Analog output monitoring setting	**Setting range**	**Default**	**Unit**	**Applicable mode**		
		0–2	0	-	P	S	T

This parameter is used to set the output mode and voltage range of the analog output.

Set value	**Output mode**
[0]	Voltage output with sign (-10V–10V)
1	Absolute voltage output (0V–10V)
2	Voltage output with zero offset (0V–10V, 5V center)

P3.36[1]	**Data size**	16bit	**Data format**	DEC
	Modbus address	1672, 1673	**CANopen address**	0x2324, 0x00

6.4.3 Digital input/output settings

P3.40[1]	Disable travel limit switch	**Setting range**	**Default**	**Unit**	**Applicable mode**		
		0–2	1	-	P	S	T

This parameter specifies whether the forward drive disabling (0x001 or 0x101) digital input and reverse drive disabling (0x002 or 0x102) digital inputs in P3.00–P3.09 are valid. You can disable the travel limit switch function by setting this parameter.

Set value	**Function**
0	The travel limit switch is normal
[1]	The travel limit switch is disabled
2	A limit exceeding fault occurs.

Note: When the travel limit switch is normal and the digital input configured as forward drive disabling is active, the motor will stop immediately and cannot continue to run forward, but it is able to receive the reverse running command.

P3.40[1]	**Data size**	16bit	**Data format**	DEC
	Modbus address	1680, 1681	**CANopen address**	0x2328, 0x00

BARGH MOTION

P3.41[1]	Disable emergency stop switch	Setting range	Default	Unit	Applicable mode		
		0–1	1	-	P	S	T

This parameter specifies whether the emergency stop (0x016 or 0x116) digital inputs in P3.00–P3.09 are valid. You can disable the emergency stop function by setting this parameter.

Set value	Function
0	The emergency stop switch is normal.
[1]	The emergency stop switch is disabled.

If the digital input of emergency stop is valid, the alarm Er10-4 is reported.

Note:

- If the alarm Er10-4 is reported, the servo motor stops in the mode specified by P4.30.
- To clear the alarm Er10-4, ensure there is no danger for operating, clear the alarm signal (that is, disable the digital input of emergency stop), clear the alarm display, and then restart the servo drive.

P3.41[1]	Data size	16bit	Data format	DEC
	Modbus address	1682, 1683	CANopen address	0x2329, 0x00

P3.43[1]	Digital input filter	Setting range	Default	Unit	Applicable mode		
		1–800	1	0.125ms	P	S	T

This parameter specifies the filter time of the digital input.

Note: This parameter independently functions for 10 digital inputs.

P3.43[1]	Data size	16bit	Data format	DEC
	Modbus address	1686, 1687	CANopen address	0x232B, 0x00

P3.44	Command pulse input invalid setting disabled	Setting range	Default	Unit	Applicable mode		
		0–1	0	-	P		

This parameter specifies whether the command pulse disabling (0x008 or 0x108) digital inputs in P3.00–P3.09 are valid. You can disable the command pulse disabling function by setting this parameter.

0: The command pulse disabled input function is valid.

0: The command pulse disabled input function is invalid.

P3.44	Data size	16bit	Data format	DEC
	Modbus address	1688, 1689	CANopen address	0x232C, 0x00

P3.45[1]	Residual pulse clearing mode	Setting range	Default	Unit	Applicable mode		
		0–1	1	-	P		

This parameter specifies the valid mode for the residual pulse clearing (0x007 or 0x107) digital inputs in P3.00–P3.09.

Set value	Function
0	ON level clearing
[1]	Rising edge clearing

P3.45[1]	Data size	16bit	Data format	DEC
	Modbus address	1690, 1691	CANopen address	0x232D, 0x00

P3.50	Range of position arrival	Setting range	Default	Unit	Applicable mode		
		0–2^{18}	100	reference unit	P		

This parameter specifies the position arrival range. If the deviation between the position feedback pulse and position command pulse is in this range, it indicates position arrival.

P3.50	Data size	32bit	Data format	DEC
	Modbus address	1700, 1701	CANopen address	0x2332, 0x00

P3.51	Output mode of position arrival	Setting range	Default	Unit	Applicable mode		
		0–4	0	-	P		

This parameter specifies the condition for the position arrival output signal and the action mode after output.

Set value	Output mode
[0]	The output is valid when the position deviation is in the range of P3.50.
1	The output is valid when there is no position command and the position deviation is in the range of P3.50.
2	The output is valid when there is no position command, the zero-speed detection signal is valid, and the position deviation is in the range of P3.50.
3	The output is valid when there is a transition from with a position command to without a position command and the position deviation is in the range of P3.50. Subsequently, the system continuously outputs the valid state within the time specified by P3.52. Then, the system updates the output status of position arrival based on the position command and position deviation.
4	The output is valid when there is a transition from with a position command to without a position command and the position deviation is in the range of P3.50. Subsequently, the system continuously outputs the valid state within the time specified by P3.52.

P3.51	Data size	16bit	Data format	DEC
	Modbus address	1702, 1703	CANopen address	0x2333, 0x00

P3.52	Hold time of position arrival output terminal	Setting range	Default	Unit	Applicable mode		
		0–30000	0	ms	P		

This parameter specifies the hold time of the position arrival output terminal.

Set value	Action
[0]	The hold time is infinite, and the holding is valid until the position in a next position command is arrived at.
1–30000	The holding is valid within the setting range. It becomes invalid once a next position command is received.

P3.52	Data size	16bit	Data format	DEC
	Modbus address	1704, 1705	CANopen address	0x2334, 0x00

P3.53	Speed consistency threshold	Setting range	Default	Unit	Applicable mode		
		10–20000	50	r/min	P	S	T

This parameter specifies the condition for detecting speed consistency.
If the difference between the speed command and motor speed is less than the setting of this parameter, then the speed consistency output status is valid.
If the detection finds there is a lag of 10 r/min, the actual speed consistency range is as follows:
If the speed consistency output is invalid, the validity threshold is (P3.53 – 10) r/min.
If the speed consistency output is valid, the invalidity threshold is (P3.53 + 10) r/min.

P3.53	Data size	16bit	Data format	DEC
	Modbus address	1706, 1707	CANopen address	0x2335, 0x00

P3.54	Speed reaching range	Setting range	Default	Unit	Applicable mode		
		10–20000	1000	r/min	P	S	T

This parameter specifies the condition for detecting speed reaching output. If the transient motor speed [R0.21] exceeds the setting of this parameter, the output is valid. The detection finds a lag of 10 r/min.

P3.54	Data size	16bit	Data format	DEC
	Modbus address	1708, 1709	CANopen address	0x2336, 0x00

P3.55	Zero speed range	Setting range	Default	Unit	Applicable mode		
		10–20000	50	r/min	P	S	T

This parameter specifies the condition for detecting zero speed output. When the absolute value of the motor speed is within this range, the speed is considered as zero speed and the zero speed output signal is valid. The detection finds a lag of 10 r/min.

P3.55	**Data size**	16bit	**Data format**	DEC
	Modbus address	1710, 1711	**CANopen address**	0x2337, 0x00

P3.56	Servo lock time after braking	**Setting range**	**Default**	**Unit**	**Applicable mode**		
		0–1000	50	ms	P	S	T

This parameter specifies the locked time of the servo after braking in locked state.
If the servo is off in locked state, the digital output of the electromagnetic brake release signal (0x005 or 0x105) is invalid. Then the servo keeps being locked for a period of time so that the motor does not rotate during the action of the relay.

P3.56	**Data size**	16bit	**Data format**	DEC
	Modbus address	1712, 1713	**CANopen address**	0x2338, 0x00

P3.57	Electromagnetic brake closing delay	**Setting range**	**Default**	**Unit**	**Applicable mode**		
		0–30000	500	ms	P	S	T

This parameter specifies the delay time of closing the electromagnetic brake. If the servo is off or an alarm is reported in running state and the speed may be too fast, the digital output of the electromagnetic brake release signal (0x005 or 0x105) becomes invalid after a period of delay. If the motor speed drops below the setting of P3.58 during the delay period, the digital output becomes invalid in advance.

P3.57	**Data size**	16bit	**Data format**	DEC
	Modbus address	1714, 1715	**CANopen address**	0x2339, 0x00

P3.58[1]	Motor speed threshold at brake release	**Setting range**	**Default**	**Unit**	**Applicable mode**		
		0–1000	30	r/min	P	S	T

This parameter specifies the motor speed threshold when the brake is released.

P3.58[1]	**Data size**	16bit	**Data format**	DEC
	Modbus address	1716, 1717	**CANopen address**	0x233A, 0x00

P3.59	Torque reaching range	**Setting range**	**Default**	**Unit**	**Applicable mode**		
		5.0–300.0	50.0	%			T

This parameter specifies the condition for detecting torque reaching output. If the motor torque feedback exceeds the setting of this parameter, the output of torque reaching (0x010 or 0x110) is valid. There is 5% lag in detection.

P3.59	**Data size**	16bit	**Data format**	DEC
	Modbus address	1718, 1719	**CANopen address**	0x233B, 0x00

P3.77	Analog input deadzone mode	**Setting range**	**Default**	**Unit**	**Applicable mode**		
		0–1	0	-	P	S	T

This parameter specifies the voltage mode of the analog input deadzone.

Set value	**Meaning**
[0]	Normal mode
1	CNC mode: If the analog input is equal to or less than the deadzone, the valid value is 0. If the analog input is greater than the deadzone, the valid value is (Analog input – Deadzone).

P3.77	**Data size**	16bit	**Data format**	DEC
	Modbus address	1754, 1755	**CANopen address**	0x234D, 0x00

P3.90	Pulse input filter	**Setting range**	**Default**	**Unit**	**Applicable mode**		
		0–7	2	-	P	S	T

This parameter specifies the filter time for detecting pulse input.

Set value	**Pulse input detection bandwidth**
0	400kHz
1	500kHz
[2]	1MHz
3	2MHz
4	4MHz
5	No filtering
6	200kHz
7	100kHz

P3.90	**Data size**	16bit	**Data format**	DEC
	Modbus address	1780, 1781	**CANopen address**	0x235A, 0x00

P3.92	Pulse feedback filter	**Setting range**	**Default**	**Unit**	**Applicable mode**		
		-	-	-	P	S	T

This parameter specifies the filter time for detecting pulse feedback of the incremental encoder.

P3.92	**Data size**	16bit	**Data format**	DEC
	Modbus address	1784, 1785	**CANopen address**	0x235C, 0x00

6.5 Extension and application (P4 group)

6.5.1 Communication setting

P4.01[1]	485 local communication address	**Setting range**	**Default**	**Unit**	**Applicable mode**		
		1–255	1	-	P	S	T
This parameter specifies the local (or slave) communication address of 485 serial communication.							
P4.01[1]	**Data size**	16bit	**Data format**		DEC		
	Modbus address	1802, 1803	**CANopen address**		0x2401, 0x00		

P4.02[1]	CAN communication baud rate	**Setting range**	**Default**	**Unit**	**Applicable mode**		
		0–5	1	-	P	S	T

This parameter is used to select CAN communication baud rate. Available baud rates are as follow:

Set value	**Baud rate**
0	1000kbps
[1]	500kbps
2	250kbps
3	125kbps
4	50kbps
5	20kbps

P4.02[1]	**Data size**	16bit	**Data format**	DEC
	Modbus address	1804, 1805	**CANopen address**	0x2402, 0x00

P4.03[1]	485 communication baud rate	**Setting range**	**Default**	**Unit**	**Applicable mode**		
		0–3	1	-	P	S	T

This parameter is used to select 485 communication baud rate. Available baud rates are as follow:

Set value	**Baud rate**
0	9600bps
[1]	19200bps

2	38400bps
3	57600bps

P4.03[1]	Data size	16bit	Data format	DEC
	Modbus address	1806, 1807	CANopen address	0x2403, 0x00

P4.04[1]	485 communication parity mode	Setting range	Default	Unit	Applicable mode		
		0–5	0	-	P	S	T

This parameter is used to set the 485 communication parity mode and it only supports RTU mode.

Set value	Baud rate
[0]	No check (N, 8, 1)
1	Even check (E, 8, 1)
2	Odd check (O, 8, 1)
3	No check (N, 8, 2)
4	Even check (E, 8, 2)
5	Odd check (O, 8, 2)

P4.04[1]	Data size	16bit	Data format	DEC
	Modbus address	1808, 1809	CANopen address	0x2404, 0x00

P4.05[1]	CAN communication node	Setting range	Default	Unit	Applicable mode		
		1–127	1	-	P	S	T

This parameter is used to set the local (or salve) node number in CAN communication.

P4.05[1]	Data size	16bit	Data format	DEC
	Modbus address	1810, 1811	CANopen address	0x2405, 0x00

P4.06	485 communication fault clearing mode	Setting range	Default	Unit	Applicable mode		
		0–1	1	-	P	S	T

This parameter specifies the mode for handling a fault that occurs in 485 communication.

Set value	Meaning
0	The fault is not cleared.
[1]	The fault is cleared automatically.

P4.06	Data size	16bit	Data format	DEC
	Modbus address	1812, 1813	CANopen address	0x2406, 0x00

P4.07[1]	EtherCAT synchronous cycle	Setting range	Default	Unit	Applicable mode		
		0–3	2	-	P	S	T

This parameter is used to set the synchronous interruption cycle of DC sync0 when DC mode is adopted for EtherCAT communication.

Set value	Meaning
0	250us
1	500us
[2]	1ms
3	2ms

P4.07[1]	Data size	16bit	Data format	DEC
	Modbus address	1814, 1815	CANopen address	0x2407, 0x00

P4.08[1]	EtherCAT synchronous type	Setting range	Default	Unit	Applicable mode		
		0–2	0	-	P	S	T

This parameter specifies the type of synchronization between the master and the slave in EtherCAT communication.

Set value	Meaning
[0]	Free-run
2	DC mode (sync0)

P4.08[1]	Data size	16bit	Data format	DEC
	Modbus address	1816, 1817	CANopen address	0x2408, 0x00

P4.09[1]	EtherCAT fault detection time	Setting range	Default	Unit	Applicable mode		
		0–1000	100	ms	P	S	T

This parameter specifies the fault detection time in EtherCAT communication.
Note: The value 0 indicates EtherCAT faults are not detected.

P4.09[1]	Data size	16bit	Data format	DEC
	Modbus address	1818, 1819	CANopen address	0x2409, 0x00

6.5.2 Servo types and communication control commands

P4.10[1]	Upper computer type	Setting range	Default	Unit	Applicable mode		
		0–1	0	-	P	S	T

This parameter specifies the upper computer type which is identified by the drive control interface

type of the upper computer.

Set value	Upper computer type	Control interface type
[0]	Pulse + analog	Position control/fully-closed-loop: pulse and PTP control Speed control/torque control: analog and internal settings
1	Communication bus	485 (protocol: Modbus) CAN (protocol: CANopen CiA301/402)

P4.10[1]	Data size	16bit	Data format	DEC
	Modbus address	1820, 1821	CANopen address	0x240A, 0x00

P4.11*	Bus servo enabling	Setting range	Default	Unit	Applicable mode		
		0–1	0	-	P	S	T

This parameter specifies whether to enable the drive.

Set value	Function
[0]	Disable
1	Enable

Note: If the drive is enabled by P0.04, the drive will be disabled if P4.11 is changed from 1 to 0.

P4.11*	Data size	16bit	Data format	DEC
	Modbus address	1822, 1823	CANopen address	0x240B, 0x00

P4.12*	Bus position command	Setting range	Default	Unit	Applicable mode		
		$-(2^{31}-1)$–$(2^{31}-1)$	0	reference unit	P		

This parameter specifies the position command for the drive when P4.10 is set to 1.

P4.12*	Data size	32bit	Data format	DEC
	Modbus address	1824, 1825	CANopen address	0x240C, 0x00

P4.13*	Bus speed command	Setting range	Default	Unit	Applicable mode		
		-20000–20000	0	r/min		S	

This parameter specifies the speed command for the drive when P4.10 is set to 1.

P4.13*	Data size	16bit	Data format	DEC
	Modbus address	1826, 1827	CANopen address	0x240D, 0x00

P4.14*	Bus torque command	Setting range	Default	Unit	Applicable mode

		-500.0–500.0	0.0	%			T

This parameter specifies the torque command for the drive when P4.10 is set to 1.

P4.14*	**Data size**	16bit	**Data format**	DEC
	Modbus address	1828, 1829	**CANopen address**	0x240E, 0x00

P4.15*	Control mode switching command	**Setting range**	**Default**	**Unit**	**Applicable mode**		
		0–1	0	-	P	S	T

This parameter can be used to switch the control mode in hybrid control mode.

Set value	**Function**	**Actual control mode**	
[0]	Disable	Position/speed	Position
		Position/torque	Position
		Position/torque	Speed
1	Enable	Position/speed	Speed
		Position/torque	Torque
		Position/torque	Torque

Note: If the control mode switching command is updated, the actual switching process of the drive and motor is handled based on the settings of P0.90–P0.92 and actual feedback state.

P4.15*	**Data size**	16bit	**Data format**	DEC
	Modbus address	1830, 1831	**CANopen address**	0x240F, 0x00

P4.16*	Gain switching command	**Setting range**	**Default**	**Unit**	**Applicable mode**		
		0–1	0	-	P	S	T

This parameter specifies whether to enable gain switching for the drive. When P2.22, P2.27, and P2.31 are set to 2, the actual gain settings are used for switching.

Set value	**Function**	**Actual gain**
[0]	Disable	1nd gain setting
1	Enable	2nd gain setting

P4.16*	**Data size**	16bit	**Data format**	DEC
	Modbus address	1832, 1833	**CANopen address**	0x2410, 0x00

P4.17*	Electronic gear ratio switching command	**Setting range**	**Default**	**Unit**	**Applicable mode**		
		0–3	0	-	P		

This parameter is used to switch electronic gear ratios for the drive when P4.10 is set to 1.

Set value	Numerator of actual electronic gear ratio	Denominator of actual electronic gear ratio
[0]	Numerator of electronic gear ratio 1 (P0.25)	Denominator of electronic gear ratio (P0.26)
1	Numerator of electronic gear ratio 2 (P0.27)	
2	Numerator of electronic gear ratio 3 (P0.28)	
3	Numerator of electronic gear ratio 4 (P0.29)	

P4.17*	Data size	16bit	Data format	DEC
	Modbus address	1834, 1835	CANopen address	0x2411, 0x00

P4.18*	Inertia ratio switching command	Setting range	Default	Unit	Applicable mode		
		0–1	0	-	P	S	T

This parameter specifies whether to enable inertia ratio switching for the drive.

Set value	Function	Actual inertia ratio
[0]	Disable	Inertia ratio 1 (P1.01)
1	Enable	Inertia ratio 2 (P1.02)

P4.18*	Data size	16bit	Data format	DEC
	Modbus address	1836, 1837	CANopen address	0x2412, 0x00

P4.19*	Zero speed clamp command	Setting range	Default	Unit	Applicable mode		
		0–1	0	-		S	T

This parameter specifies whether to carry out zero speed clamp operation on the drive.

Set value	Function
[0]	Disable
1	Enable

P4.19*	Data size	16bit	Data format	DEC
	Modbus address	1838, 1839	CANopen address	0x2413, 0x00

P4.20*	Clearing residual pulses	Setting range	Default	Unit	Applicable mode		
		0–1	0	-	P		

This parameter specifies whether to enable residual pulse clearing on the drive. P3.45 specifies the mode for clearing residual pulses. If residual pulses are cleared, R0.04 is changed to 0.

Set value	Function
[0]	Disable
1	Enable

P4.20*	Data size	16bit	Data format	DEC
	Modbus address	1840, 1841	CANopen address	0x2414, 0x00

P4.21*	Torque limit switching command	Setting range	Default	Unit	Applicable mode		
		0–1	0	-	P	S	T

This parameter specifies whether to enable torque limit switching for the drive.

Set value	Function
[0]	Disable
1	Enable

P4.21*	Data size	16bit	Data format	DEC
	Modbus address	1842, 1843	CANopen address	0x2415, 0x00

P4.22*	External fault command	Setting range	Default	Unit	Applicable mode		
		0–1	0	-	P	S	T

This parameter specifies whether to enable external fault reporting for the drive.

Set value	Function
[0]	Disable
1	Enable

P4.22*	Data size	16bit	Data format	DEC
	Modbus address	1844, 1845	CANopen address	0x2416, 0x00

P4.23*	Emergency stop command	Setting range	Default	Unit	Applicable mode		
		0–1	0	-	P	S	T

This parameter specifies whether to carry out emergency stop operation on the drive.

Set value	Function
[0]	Disable
1	Enable

P4.23*	**Data size**	16bit	**Data format**	DEC
	Modbus address	1846, 1847	**CANopen address**	0x2417, 0x00

P4.24*	Input command of vibration control switching	**Setting range**	**Default**	**Unit**	**Applicable mode**		
		0–1	0	-	P		

This parameter specifies whether to enable vibration control switching for the drive.

Set value	**Function**
[0]	Disable
1	Enable

P4.24*	**Data size**	16bit	**Data format**	DEC
	Modbus address	1848, 1849	**CANopen address**	0x2418, 0x00

6.5.3 Extension and application

P4.30	Stop mode	**Setting range**	**Default**	**Unit**	**Applicable mode**		
		0–2	0	-	P	S	T

When the servo is turned OFF and when fault alarm occurs, this parameter is used to set whether the dynamic brake works or not and the state of the servo motor after stop:

Set value of P4.30	**Action**	
	During deceleration	**After stopping**
[0]	Coast to stop	Keep the inertia running state
1	Dynamic brake to stop	Keep the inertia running state
2	Dynamic brake to stop	Dynamic braking state

Note:

- If P4.30 is set to 1, the dynamic brake works when the motor speed is higher than the setting (30 r/min by default) of P3.58 and it does not work otherwise. After the motor stops, the dynamic brake does not work.
- If P4.30 is set to 2, the dynamic brake is independent of the setting of P3.58, and the dynamic brake works continuously.
- If the servo motor runs at a speed higher than the rated one, you cannot enable the dynamic brake. If the servo motor runs at a high speed with a large inertia load, exercise caution before using the dynamic brake. Do not restart the dynamic brake frequently. Otherwise, the servo drive may be damaged.

P4.30	**Data size**	16bit	**Data format**	DEC
	Modbus address	1860, 1861	**CANopen address**	0x241E, 0x00

P4.31	Max. speed limit	**Setting range**	**Default**	**Unit**	**Applicable mode**		
		0–20000	5000	r/min	P	S	T

This parameter specifies the maximum speed of the servo motor. If the absolute value of the speed command is greater than the setting of this parameter, the actually-set speed is limited by this parameter, and the actual direction is the same as that in the original speed command. This parameter is valid in all modes.

Note: The default value and setting range of this parameter are associated with the drive power class.

P4.31	**Data size**	16bit	**Data format**	DEC
	Modbus address	1862, 1863	**CANopen address**	0x241F, 0x00

P4.32	Overspeed threshold	**Setting range**	**Default**	**Unit**	**Applicable mode**		
		0–20000	6000	r/min	P	S	T

This parameter specifies the overspeed level for the servo motor. When the motor runs at a speed higher than the setting of this parameter, an overspeed fault alarm is reported.

Note: The default value and setting range of this parameter are associated with the drive power class.

P4.32	**Data size**	16bit	**Data format**	DEC
	Modbus address	1864, 1865	**CANopen address**	0x2420, 0x00

P4.33	Pulse threshold of position deviation	**Setting range**	**Default**	**Unit**	**Applicable mode**		
		0–2^{27}	100000	reference unit	P		

This parameter is used to set the alarm threshold for the position deviation (Er22-0). In position mode, when the number of the residual pulses exceed the setting of this parameter, the fault alarm is reported. When P4.33=0, it means position deviation will not be detected.

P4.33	**Data size**	32bit	**Data format**	DEC
	Modbus address	1866, 1867	**CANopen address**	0x2421, 0x00

P4.34[1]	Brake overload detection selection	**Setting range**	**Default**	**Unit**	**Applicable mode**		
		0–2	0	-	P	S	T

This parameter is used to set the regenerative brake mode and overload protection mode.

Set value	Regenerative brake and overload protection
[0]	Disable (no regenerative brake)
1	Built-in
2	External

P4.34[1]	Data size	16bit	Data format	DEC
	Modbus address	1868, 1869	CANopen address	0x2422, 0x00

P4.35	Enable out-of-control speed detection	Setting range	Default	Unit	Applicable mode		
		0–1	1	-	P	S	T

This parameter specifies whether to enable the detection on out-of-control speed.

Set value	Out-of-control speed detection function
0	Disable
[1]	Valid

P4.35	Data size	16bit	Data format	DEC
	Modbus address	1870, 1871	CANopen address	0x2423, 0x00

P4.36[1]	Main power UV protection	Setting range	Default	Unit	Applicable mode		
		0–1	1	-	P	S	T

This parameter specifies whether the drive reports a main circuit undervoltage alarm when the main power encounters a main circuit undervoltage fault.

Set value	Protection
0	In servo enabling state, the drive does not report the fault Er13-1 when main circuit undervoltage occurs.
[1]	In servo enabling state, the drive reports the fault Er13-1 and stops when main circuit undervoltage occurs.

P4.36[1]	Data size	16bit	Data format	DEC
	Modbus address	1872, 1873	CANopen address	0x2424, 0x00

P4.37	Main power UV detection time	Setting range	Default	Unit	Applicable mode		
		70–2000	70	ms	P	S	T

This parameter specifies the time taken to detect main power undervoltage.

Note: The value 2000 indicates the function of detecting main power undervoltage is invalid.

P4.37	**Data size**	16bit	**Data format**	DEC
	Modbus address	1874, 1875	**CANopen address**	0x2425, 0x00

P4.38	Motor overload rate	**Setting range**	**Default**	**Unit**	**Applicable mode**		
		0.0–500.0	115.0	%	P	S	T
This parameter specifies the overload rate alarm threshold for the servo motor. When the actual load rate of the motor exceeds the setting of this parameter, a motor overload alarm is reported. **Note:** The default value is 115.0%. When increasing the value of this parameter, please take the motor overload capacity into consideration.							
P4.38	**Data size**	16bit	**Data format**	DEC			
	Modbus address	1876, 1877	**CANopen address**	0x2426, 0x00			

P4.39	Speed deviation setting	**Setting range**	**Default**	**Unit**	**Applicable mode**		
		0–20000	0	r/min	P	S	
This parameter specifies the condition for detecting the speed deviation fault. If the absolute value of the actual speed command minus the motor speed is greater than the setting of this parameter and the deviation lasts more than 100ms, a speed deviation alarm is reported. **Note:** The value 0 indicates the speed deviation fault will not be detected.							
P4.39	**Data size**	16bit	**Data format**	DEC			
	Modbus address	1878, 1879	**CANopen address**	0x2427, 0x00			

P4.40	Forward speed limit	**Setting range**	**Default**	**Unit**	**Applicable mode**		
		0–20000	20000	r/min	P	S	T
This parameter specifies the maximum limit on the forward speed command. **Note:** The default value and setting range of this parameter are associated with the drive power class.							
P4.40	**Data size**	16bit	**Data format**	DEC			
	Modbus address	1880, 1881	**CANopen address**	0x2428, 0x00			

P4.41	Reverse speed limit	**Setting range**	**Default**	**Unit**	**Applicable mode**		
		-20000–0	-20000	r/min	P	S	T
This parameter specifies the maximum limit on the reverse speed command. **Note:** The default value and setting range of this parameter are associated with the drive power class.							
P4.41	**Data size**	16bit	**Data format**	DEC			

	Modbus address	1882, 1883	**CANopen address**	0x2429, 0x00

P4.42	Internal speed with high resolution	**Setting range**	**Default**	**Unit**	**Applicable mode**		
		-20000.0–20000.0	0.0	r/min		S	
This parameter specifies the internal speed with high resolution.							
P4.42	**Data size**	32bit	**Data format**	DEC			
	Modbus address	1884, 1885	**CANopen address**	0x242A, 0x00			

P4.43	Out-of-control speed detection threshold	**Setting range**	**Default**	**Unit**	**Applicable mode**		
		0.0–2000.0	30.0	r/min	P	S	T
This parameter specifies speed threshold for out-of-control protection. The smaller set value, the more sensitive. **Note:** A smaller value indicates more sensitive.							
P4.43	**Data size**	16bit	**Data format**	DEC			
	Modbus address	1886, 1887	**CANopen address**	0x242B, 0x00			
P4.45	Temperature protection threshold of medium-power motor	**Setting range**	**Default**	**Unit**	**Applicable mode**		
		0–200	0	°C	P	S	T
Temperature sampling from temperature resistor KTY84-130 is supported. If the temperature exceeds the setting of this parameter, a motor overtemperature (OT) fault is reported. The value 0 indicates temperature sampling is not conducted.							
P4.45	**Data size**	16bit	**Data format**	DEC			
	Modbus address	1890, 1891	**CANopen address**	0x242D, 0x00			

P4.50[1]	Encoder phase-Z offset	**Setting range**	**Default**	**Unit**	**Applicable mode**		
		0–(2^{20}-1)	0	pulse	P	S	T
This parameter specifies the output position of phase Z. The phase-Z offset is the pulses in the CCW direction.							
P4.50[1]	**Data size**	32bit	**Data format**	DEC			
	Modbus address	1900, 1901	**CANopen address**	0x2432, 0x00			

P4.51	Torque limit switching time 1	**Setting range**	**Default**	**Unit**	**Applicable mode**

		0–4000	0	ms/(100%)	P	S	

This parameter specifies the time taken to switch from the first torque limit to the second torque limit.

P4.51	**Data size**	16bit	**Data format**	DEC
	Modbus address	1902, 1903	**CANopen address**	0x2433, 0x00

P4.52	Torque limit switching time 2	**Setting range**	**Default**	**Unit**	**Applicable mode**		
		0–4000	0	ms/(100%)	P	S	

This parameter specifies the time taken to switch from the second torque limit to the first torque limit.

P4.52	**Data size**	16bit	**Data format**	DEC
	Modbus address	1904, 1905	**CANopen address**	0x2434, 0x00

P4.53	Current loop response adjustment	**Setting range**	**Default**	**Unit**	**Applicable mode**		
		10.0–200.0	100.0	%	P	S	T

This parameter specifies the adjustment coefficient of current loop response width.

P4.53	**Data size**	16bit	**Data format**	DEC
	Modbus address	1906, 1907	**CANopen address**	0x2435, 0x00

P4.54[1]	Delay after power-on initialization	**Setting range**	**Default**	**Unit**	**Applicable mode**		
		0–200000	0	ms	P	S	T

This parameter specifies the delay time of servo enabling after power-on initialization is completed.

P4.54[1]	**Data size**	32bit	**Data format**	DEC
	Modbus address	1908, 1909	**CANopen address**	0x2436, 0x00

6.5.4 Frequency-division output and 2nd encoder settings

P4.60[1]	Frequency-division numerator of external linear encoder	**Setting range**	**Default**	**Unit**	**Applicable mode**		
		1–(2^{31}-1)	10000	-	P		

This parameter specifies the frequency-division numerator of the external linear encoder.

P4.60[1]	**Data size**	32bit	**Data format**	DEC
	Modbus address	1920, 1921	**CANopen address**	0x243C, 0x00

P4.61[1]	Frequency-division	**Setting range**	**Default**	**Unit**	**Applicable**

	denominator of external linear encoder				mode		
		1–(2^{31}-1)	10000	-	P		
This parameter specifies the frequency-division denominator of the external linear encoder. It							
P4.61[1]	Data size	32bit	Data format	DEC			
	Modbus address	1922, 1923	CANopen address	0x243D, 0x00			

P4.62[1]	Direction reversal of external linear encoder	Setting range	Default	Unit	Applicable mode		
		0–1	0	-	P		
This parameter is used to set the direction reversal of external linear encoder feedback counting.							
	Set value	Function					
	[0]	Use the count from the external linear encoder directly.					
	1	Reverse the count from the external linear encoder and then use the reversed count.					
P4.62[1]	Data size	16bit	Data format	DEC			
	Modbus address	1924, 1925	CANopen address	0x243E, 0x00			

P4.64[1]	Hybrid control deviation limit	Setting range	Default	Unit	Applicable mode		
		1–2^{27}	160000	reference unit	P		
In the fully-closed loop control, set the tolerance (mixed deviation) between the user unit (reference unit) corresponding to the encoder feedback position and user unit (reference unit) corresponding to the linear encoder feedback position. If R0.05 exceeds the setting value, the drive will report Er22-1.							
P4.64[1]	Data size	32bit	Data format	DEC			
	Modbus address	1928, 1929	CANopen address	0x2440, 0x00			

P4.65[1]	Threshold for hybrid-control deviation clearing	Setting range	Default	Unit	Applicable mode		
		0–100	0	rotations	P		
This parameter specifies the condition for clearing the hybrid-control deviation. When the motor rotation number reaches the specified one, the hybrid-control deviation is cleared. The value 0 indicates the hybrid-control deviation is not cleared.							
P4.65[1]	Data size	16bit	Data format	DEC			
	Modbus address	1930, 1931	CANopen address	0x2441, 0x00			

P4.67[1]	External grating pulse	Setting range	Default	Unit	Applicable mode

	output mode of phase AB	0–1	0	-	P		

It is used to set the signal source of pulse feedback output when fully-closed loop function is enabled under position mode.

Set value	Pulse feedback signal source
[0]	Encoder feedback
1	Linear encoder feedback

P4.67[1]	**Data size**	16bit	**Data format**	DEC
	Modbus address	1934, 1935	**CANopen address**	0x2443, 0x00

P4.68[1]	External linear encoder (or encoder 2) resolution	**Setting range**	**Default**	**Unit**	**Applicable mode**		
		1–(2^{31}-1)	10000	pulse	P		

This parameter specifies the resolution of the external linear encoder (or 2nd encoder). If the 2nd encoder is connected, the output is the pulses needed for each encoder rotation.

P4.68[1]	**Data size**	32bit	**Data format**	DEC
	Modbus address	1936, 1937	**CANopen address**	0x2444, 0x00

P4.69[1]	Frequency division output source	**Setting range**	**Default**	**Unit**	**Applicable mode**		
		0–4	0	-	P	S	T

This parameter specifies the signal source of frequency division output.

Set value	Pulse feedback signal source
[0]	Normal frequency-division output
1	2nd encoder bypass
2	Quadrature pulse input bypass in phases A and B
3	Internal virtual shaft
4	First encoder bypass (valid only for incremental encoders)

P4.69[1]	**Data size**	32bit	**Data format**	DEC
	Modbus address	1938, 1939	**CANopen address**	0x2445, 0x00

P4.70[1]	External linear encoder (2nd encoder) Z signal type	**Setting range**	**Default**	**Unit**	**Applicable mode**		
		0–3	0	-	P	S	T

As Z signal width is divided into 1/4, 1/2 and 1/1, the starting phase of the signal for each width corresponds to 4 kinds of AB levels, so there are in total 12 kinds of combinations. However, in order to adapt to these combinations and ensure the capture value is normal in both forward and reverse directions, it is necessary to set the AB state value corresponds to the middle of Z signal high level. For 1/4 and 1/2, they require any one of AB states during high level period after Z type signal setting; for 1/1 width encoder, the set Z type must be the AB value corresponds to the middle of high level.

P4.70[1]	**Data size**	16bit	**Data format**	DEC
	Modbus address	1940, 1941	**CANopen address**	0x2446, 0x00

P4.71	Type of encoder 2	**Setting range**	**Default**	**Unit**	**Applicable mode**		
		1–12	4*[1]	-	P	S	T

The mapping between the type of encoder 2 and settings of P4.71 is as follows:

Set value	Meaning
1	2500-PPR standard incremental type
2	2500-PPR economical incremental type
3	17-bit single-turn absolute value
[4]	17-bit multi-turn absolute value*[3]
8	Rotary transformer
10	23-bit multi-turn absolute value*[3]
Other	Reserved

P4.71	**Data size**	16bit	**Data format**	DEC
	Modbus address	1942, 1943	**CANopen address**	0x2447, 0x00

P4.72	Cascading mode of 2nd encoder	**Setting range**	**Default**	**Unit**	**Applicable mode**		
		1–12	0	-	P	S	T

This parameter specifies the cascading mode of 2nd encoder.

Set value	Meaning
[0]	No cascading
1	The slave of RS485 synchronization
2	The master of RS485 synchronization
3	2nd encoder is cascaded to the slave.
4	2nd encoder is cascaded to the master.

P4.72	Data size	16bit	Data format	DEC
	Modbus address	1944, 1945	CANopen address	0x2448, 0x00

P4.87	CANopen communication cycle	Setting range	Default	Unit	Applicable mode		
		0–(2^{31}-1)	0	μs	P	S	T

This parameter specifies the synchronization signal cycle of a CANopen slave.

Note: The recommended unit is 1000μs.

P4.87	Data size	32bit	Data format	DEC
	Modbus address	1974, 1975	CANopen address	0x2457, 0x00

P4.88	CANopen heartbeat cycle	Setting range	Default	Unit	Applicable mode		
		0–32767	1000	ms	P	S	T

This parameter specifies the heartbeat signal cycle of a CANopen slave.

P4.88	Data size	16bit	Data format	DEC
	Modbus address	1976, 1977	CANopen address	0x2458, 0x00

P4.89	Automatic stop at CANopen disconnection	Setting range	Default	Unit	Applicable mode		
		0–1	0	-	P	S	T

This parameter specifies whether to enable automatic stop when CANopen communication is disconnected.

Set value	Function
[0]	Disable
1	Enable

P4.89	Data size	16bit	Data format	DEC
	Modbus address	1978, 1979	CANopen address	0x2459, 0x00

6.5.5 Special commands

P4.90*	Fault recovery	Setting range	Default	Unit	Applicable mode		
		0–1	0	-	P	S	T

This parameter can be set by the upper computer via communication mode to clear the drive fault.

Set value	Function
[0]	Disable
1	Enable

Note:

- If fault recovery command is enabled, the servo is not enabled for the drive, and the fault occurring condition is not triggered, the fault that can be automatically cleared recovers automatically. Other faults cannot be automatically cleared online but can be cleared after repower-on.
- You can set this parameter on the LED panel to clear faults.

P4.90*	Data size	16bit	Data format	DEC
	Modbus address	1980, 1981	CANopen address	0x245A, 0x00

P4.91*	Parameter saving	Setting range	Default	Unit	Applicable mode		
		0–1	0	-	P	S	T

If P0.17 is set to 1 (saving in batches), this parameter can be used to send a parameter saving command so that any parameter modification can be written to the EEPROM.

Set value	Function
[0]	Disable
1	Enable

P4.91*	Data size	16bit	Data format	DEC
	Modbus address	1982, 1983	CANopen address	0x245B, 0x00

P4.92*	Restoring to default	Setting range	Default	Unit	Applicable mode		
		0–1	0	-	P	S	T

This parameter specifies whether to enable the function of restoring factory settings. If the function is enabled, all user parameters (P0–P6 group) are restored to factory settings.

Set value	Function
[0]	Disable
1	Enable

P4.92*	Data size	16bit	Data format	DEC
	Modbus address	1984, 1985	CANopen address	0x245C, 0x00

P4.93*	Read fault records	Setting range	Default	Unit	Applicable mode		
		0–1	0	-	P	S	T

This parameter specifies whether to enable the function of reading fault records. If the function is enabled, the fault records specified by P4.95 are read and displayed.

Set value	Function
[0]	Disable
1	Enable

P4.93*	Data size	16bit	Data format	DEC
	Modbus address	1986, 1987	CANopen address	0x245D, 0x00

P4.94*	Clear fault records	Setting range	Default	Unit	Applicable mode		
		0–1	0	-	P	S	T

This parameter specifies whether to enable the function of clearing fault records. If the function is enabled, all the fault records are cleared.

Set value	Function
[0]	Disable
1	Enable

P4.94*	Data size	16bit	Data format	DEC
	Modbus address	1988, 1989	CANopen address	0x245E, 0x00

P4.95*	Group number of fault record	Setting range	Default	Unit	Applicable mode		
		0–9	0	-	P	S	T

This parameter specifies the group number of fault records that are read.

The value 0 indicates the fault records in group 1 are read and the faults have occurred most recently. The value 9 indicates the fault records in group 10 are read and the faults have occurred earliest.

P4.95*	**Data size**	16bit	**Data format**	DEC
	Modbus address	1990, 1991	**CANopen address**	0x245F, 0x00

P4.96*	(Reserved)	**Setting range**	**Default**	**Unit**	**Applicable mode**		
		-	-	-	P	S	T
This parameter cannot be modified.							
P4.96*	**Data size**	16bit	**Data format**	DEC			
	Modbus address	1992, 1993	**CANopen address**	0x2460, 0x00			

P4.97*	EEPROM operation of communication encoder	**Setting range**	**Default**	**Unit**	**Applicable mode**		
		0–1	0	-	P	S	T
This parameter specifies whether to write all motor-related parameters to the EEPROM equipped with the communication encoder. In any following startup, the drive uses the data in the EEPROM for parameter initialization.							
P4.97*	**Data size**	16bit	**Data format**	DEC			
	Modbus address	1994, 1995	**CANopen address**	0x2461, 0x00			

P4.98	Absolute encoder power-on reading function	**Setting range**	**Default**	**Unit**	**Applicable mode**		
		0–1	1	-	P	S	T

When the drive is connected to a communication encoder, this parameter can be used to set whether to read the motor data in the encoder EEPROM for initialization of the relevant parameters.

Set value	**Function**
0	Disable
[1]	Enable

P4.98	**Data size**	16bit	**Data format**	DEC
	Modbus address	1996, 1997	**CANopen address**	0x2462, 0x00

6.6 Program jog, homing, and PTP control (P5 group)

6.6.1 Program jog

P5.00	Jog mode selection	**Setting range**	**Default**	**Unit**	**Applicable mode**		
		0–6	0	-	P		

P5.00	Jog mode selection	Setting range	Default	Unit	Applicable mode		
		0–6	0	-	P		

This parameter is used to set the program jog running mode:

Mode	Key	Function
[0]		(Wait time P5.04→Forward moving P5.01) × Cycles P5.05 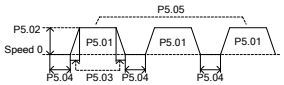
1		(Wait time P5.04→Forward moving P5.01) × Cycles P5.05 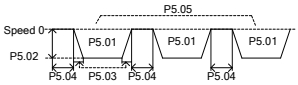
2		(Wait time P5.04→Forward moving P5.01) × Cycles P5.05→(Wait time P5.04→Reverse moving P5.01) × Cycles P5.05 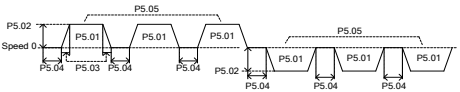
3		(Wait time P5.04→Forward moving P5.01) × Cycles P5.05→(Wait time P5.04→Reverse moving P5.01) × Cycles P5.05 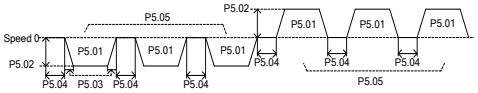
4		(Wait time P5.04→Forward moving P5.01→Wait time P5.04→Reverse moving P5.01) × Cycles P5.05 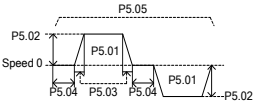
5		(Wait time P5.04→Reverse moving P5.01→Wait time P5.04→Forward moving P5.01) × Cycles P5.05 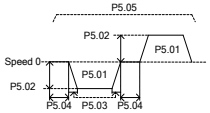
6	or	(Wait time P5.04→Forward/reverse moving P5.01) × 1 cycle 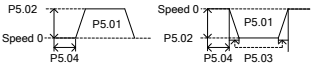

P5.00	Data size	16bit	Data format	DEC
	Modbus address	2000, 2001	CANopen address	0x2500, 0x00

P5.01	JOG movement amount	Setting range	Default	Unit	Applicable mode		
		1–2^{30}	50000	reference unit	P		
This parameter specifies the increment of the position movement at jogging.							
P5.01	Data size	32bit	Data format		DEC		
	Modbus address	2002, 2003	CANopen address		0x2501, 0x00		

P5.02	Jogging speed setting	Setting range	Default	Unit	Applicable mode		
		1–5000	500	r/min	P		
This parameter specifies the maximum running speed at jogging.							
P5.02	Data size	16bit	Data format		DEC		
	Modbus address	2004, 2005	CANopen address		0x2502, 0x00		

P5.03	Jogging ACC/DEC time	Setting range	Default	Unit	Applicable mode		
		2–10000	100	ms	P		
This parameter specifies the acceleration or deceleration time at jogging. The setting of this parameter corresponds to the time taken to accelerate from the zero speed to the rated rotation speed. If you need to improve the speed from zero to 50% of the rated speed, the time taken to reach the target speed is 50% of the time specified by this parameter.							
P5.03	Data size	16bit	Data format		DEC		
	Modbus address	2006, 2007	CANopen address		0x2503, 0x00		

P5.04	Jogging wait time	Setting range	Default	Unit	Applicable mode		
		0–10000	100	ms	P		
This parameter specifies the wait time at jogging. The setting of this parameter corresponds to the time from jogging starting to the actual running or to the time taken to wait for next displacement after the current displacement.							
P5.04	Data size	16bit	Data format		DEC		
	Modbus address	2008, 2009	CANopen address		0x2504, 0x00		

P5.05	Jogging cycle times	Setting range	Default	Unit	Applicable mode		
		0–10000	1	-	P		
This parameter specifies the number of jogging cycles. For details, see the description for P5.00.							
P5.05	Data size	16bit	Data format		DEC		
	Modbus address	2010, 2011	CANopen address		0x2505, 0x00		

6.6.2 Homing

P5.10[2]	Homing mode	Setting range	Default	Unit	Applicable mode		
		0–128	0	-	P		

This parameter specifies the homing mode.

Display mode: DEC

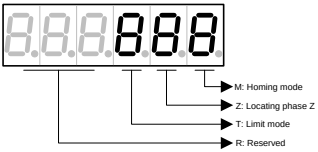

R	T	Z	M
Reserved	Limit mode	Phase Z locating mode	Homing mode
	0–1	0–2	0–8
	T: Invalid	Z=0: Returning to locate phase Z is defined as the home position. Z=1: Forwarding to locate phase Z is defined as the home position. Z=2: No locating phase Z. The recurrent point is defined as the home position.	M=0: Forward rotation. The forward limit switch is the recurrent point.
	T: Invalid		M=1: Reverse rotation. The reverse limit switch is the recurrent point.
	Limit encountered: T=0: Report an offside fault. T=1: Reverse the direction.		M=2: Forward rotation. The rising edge of the home switch is the recurrent point.
			M=3: Reverse rotation. The rising edge of the reverse limit switch is the recurrent point.
		Z: Invalid	M=4: Forward rotation. The first phase-Z signal is regarded as the home position.
		Z: Invalid	M=5: Reverse rotation. The first phase-Z signal is regarded as the home position.
		Z=0: Returning to locate phase Z is defined as the home position.	M=6: Forward rotation. The falling edge of the home switch is the recurrent point.
		Z=1: Forwarding to locate phase Z is defined as the home position. Z=2: No locating phase Z. The recurrent point is defined as the home	M=7: Reverse rotation. The falling edge of the home switch is the recurrent point.

		position.	
	T: Invalid	Z: Invalid	M=8: The current position is defined as the home position.

P5.10[2]	Data size	16bit	Data format	DEC
	Modbus address	2020, 2021	CANopen address	0x2505, 0x00

P5.11	Homing upon power-on	Setting range	Default	Unit	Applicable mode		
		0–1	0	-	P		

This parameter specifies whether to return to the home position automatically upon power-on.

Set value	Description
[0]	Invalid
1	Valid

Note: Automatic homing upon power-on is valid only when there is no fault.

P5.11	Data size	16bit	Data format	DEC
	Modbus address	2022, 2023	CANopen address	0x250B, 0x00

P5.12	High speed at homing step 1	Setting range	Default	Unit	Applicable mode		
		0–2000	100	r/min	P		

This parameter specifies the high speed at step 1 of homing.

See the following figure.

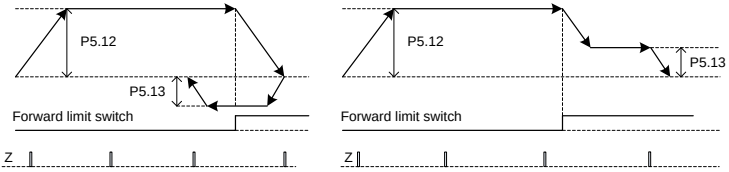

P5.12	Data size	16bit	Data format	DEC
	Modbus address	2024, 2025	CANopen address	0x250C, 0x00

P5.13	Low speed at homing step 2	Setting range	Default	Unit	Applicable mode		
		0–60	20	r/min	P		

This parameter specifies the low speed at step 2 of homing. For details, see the diagram in the description for P5.12.

P5.13	Data size	16bit	Data format	DEC
	Modbus address	2026, 2027	CANopen address	0x250D, 0x00

P5.14	Home setting	Setting range	Default	Unit	Applicable mode

		$-(2^{31}-1)$–$(2^{31}-1)$	0	reference unit	P		

This parameter is used to set the value of the home.

P5.14	Data size	32bit	Data format	DEC
	Modbus address	2028, 2029	CANopen address	0x250E, 0x00

P5.15*	Homing trigger command	Setting range	Default	Unit	Applicable mode		
		0–1	0	-	P		

This parameter specifies whether to trigger the homing function. It has the same function as the homing trigger terminal with digital input.

P5.15*	Data size	16bit	Data format	DEC
	Modbus address	2030, 2031	CANopen address	0x250F, 0x00

P5.16	Homing associated action	Setting range	Default	Unit	Applicable mode		
		0–3	1	-	P		

This parameter specifies the action associated with homing.

Set value	Description
0	No action.
[1]	The drive goes to the target position.
2	The drive goes to the position of segment 0.
3	The drive goes to the target position without homing.

P5.16	Data size	16bit	Data format	DEC
	Modbus address	2032, 2033	CANopen address	0x2510, 0x00

P5.17	Target speed after homing	Setting range	Default	Unit	Applicable mode		
		1–5000	100	r/min	P		

This parameter specifies the target speed after homing. The change takes effect before homing.

P5.17	Data size	16bit	Data format	DEC
	Modbus address	2034, 2035	CANopen address	0x2511, 0x00

P5.18	ACC/DEC time for target speed after homing	Setting range	Default	Unit	Applicable mode		
		0–32767	300	ms	P		

This parameter specifies the acceleration or deceleration time taken to reach the target speed after homing. The setting of this parameter corresponds to the time taken to accelerate from the

zero speed to the rated rotation speed. If you need to improve the speed from zero to 50% of the rated speed, the time taken to reach the target speed is 50% of the time specified by this parameter.

P5.18	Data size	16bit	Data format	DEC
	Modbus address	2036, 2037	CANopen address	0x2512, 0x00

P5.19	Target position after homing	Setting range	Default	Unit	Applicable mode		
		$-(2^{31}-1)$–$(2^{31}-1)$	0	reference unit	P		

This parameter specifies the target position after homing.

P5.19	Data size	32bit	Data format	DEC
	Modbus address	2038, 2039	CANopen address	0x2513, 0x00

6.6.3 PTP control

P5.20*	PTP trigger signal	Setting range	Default	Unit	Applicable mode		
		-1–2048	-1	-	P		

This parameter specifies whether to trigger the target segment.

If data is written, PTP is triggered, and the internal buffer can receive 8 trigger signals at most.

Trigger signal	Function
[-1]	Invalid
0–127	It triggers PTP control for PTPs 0–127, which equals the digital input of TRIG+POSn.
128–2047	Invalid
2048	Forcible stop.

Example: If segment signal 3 is written, segment program 3 is triggered.

P5.20*	Data size	16bit	Data format	DEC
	Modbus address	2040, 2041	CANopen address	0x2514, 0x00

P5.21	Target speed 00	Setting range	Default	Unit	Applicable mode		
		0–6000	20	r/min	P		
P5.22	Target speed 01	Setting range	Default	Unit	Applicable mode		
		0–6000	50	r/min	P		
P5.23	Target speed 02	Setting range	Default	Unit	Applicable mode		
		0–6000	100	r/min	P		

P5.24	Target speed 03	**Setting range**	**Default**	**Unit**	**Applicable mode**		
		0–6000	200	r/min	P		
P5.25	Target speed 04	**Setting range**	**Default**	**Unit**	**Applicable mode**		
		0–6000	300	r/min	P		
P5.26	Target speed 05	**Setting range**	**Default**	**Unit**	**Applicable mode**		
		0–6000	500	r/min	P		
P5.27	Target speed 06	**Setting range**	**Default**	**Unit**	**Applicable mode**		
		0–6000	600	r/min	P		
P5.28	Target speed 07	**Setting range**	**Default**	**Unit**	**Applicable mode**		
		0–6000	800	r/min	P		
P5.29	Target speed 08	**Setting range**	**Default**	**Unit**	**Applicable mode**		
		0–6000	1000	r/min	P		
P5.30	Target speed 09	**Setting range**	**Default**	**Unit**	**Applicable mode**		
		0–6000	1300	r/min	P		
P5.31	Target speed 10	**Setting range**	**Default**	**Unit**	**Applicable mode**		
		0–6000	1500	r/min	P		
P5.32	Target speed 11	**Setting range**	**Default**	**Unit**	**Applicable mode**		
		0–6000	1800	r/min	P		
P5.33	Target speed 12	**Setting range**	**Default**	**Unit**	**Applicable mode**		
		0–6000	2000	r/min	P		
P5.34	Target speed 13	**Setting range**	**Default**	**Unit**	**Applicable mode**		
		0–6000	2300	r/min	P		
P5.35	Target speed 14	**Setting range**	**Default**	**Unit**	**Applicable mode**		
		0–6000	2500	r/min	P		
P5.36	Target speed 15	**Setting range**	**Default**	**Unit**	**Applicable mode**		
		0–6000	3000	r/min	P		

This group of parameter specifies the target speed for each segment.				
P5.21	**Data size**	16bit	**Data format**	DEC
	Modbus address	2042, 2043	**CANopen address**	0x2515, 0x00
P5.22	**Data size**	16bit	**Data format**	DEC
	Modbus address	2044, 2045	**CANopen address**	0x2516, 0x00
P5.23	**Data size**	16bit	**Data format**	DEC
	Modbus address	2046, 2047	**CANopen address**	0x2517, 0x00
P5.24	**Data size**	16bit	**Data format**	DEC
	Modbus address	2048, 2049	**CANopen address**	0x2518, 0x00
P5.25	**Data size**	16bit	**Data format**	DEC
	Modbus address	2050, 2051	**CANopen address**	0x2519, 0x00
P5.26	**Data size**	16bit	**Data format**	DEC
	Modbus address	2052, 2053	**CANopen address**	0x251A, 0x00
P5.27	**Data size**	16bit	**Data format**	DEC
	Modbus address	2054, 2055	**CANopen address**	0x251B, 0x00
P5.28	**Data size**	16bit	**Data format**	DEC
	Modbus address	2056, 2057	**CANopen address**	0x251C, 0x00
P5.29	**Data size**	16bit	**Data format**	DEC
	Modbus address	2058, 2059	**CANopen address**	0x251D, 0x00
P5.30	**Data size**	16bit	**Data format**	DEC
	Modbus address	2060, 2061	**CANopen address**	0x251E, 0x00
P5.31	**Data size**	16bit	**Data format**	DEC
	Modbus address	2062, 2063	**CANopen address**	0x251F, 0x00
P5.32	**Data size**	16bit	**Data format**	DEC
	Modbus address	2064, 2065	**CANopen address**	0x2520, 0x00
P5.33	**Data size**	16bit	**Data format**	DEC
	Modbus address	2066, 2067	**CANopen address**	0x2521, 0x00
P5.34	**Data size**	16bit	**Data format**	DEC
	Modbus address	2068, 2069	**CANopen address**	0x2522, 0x00
P5.35	**Data size**	16bit	**Data format**	DEC
	Modbus address	2070, 2071	**CANopen address**	0x2523, 0x00
P5.36	**Data size**	16bit	**Data format**	DEC
	Modbus address	2072, 2073	**CANopen address**	0x2524, 0x00

P5.37	ACC/DEC time 00	**Setting range**	**Default**	**Unit**	**Applicable mode**
		0–32767	200	ms	P
P5.38	ACC/DEC time 01	**Setting range**	**Default**	**Unit**	**Applicable mode**

		0–32767	300	ms	P		
P5.39	ACC/DEC time 02	**Setting range**	**Default**	**Unit**	**Applicable mode**		
		0–32767	500	ms	P		
P5.40	ACC/DEC time 03	**Setting range**	**Default**	**Unit**	**Applicable mode**		
		0–32767	600	ms	P		
P5.41	ACC/DEC time 04	**Setting range**	**Default**	**Unit**	**Applicable mode**		
		0–32767	800	ms	P		
P5.42	ACC/DEC time 05	**Setting range**	**Default**	**Unit**	**Applicable mode**		
		0–32767	900	ms	P		
P5.43	ACC/DEC time 06	**Setting range**	**Default**	**Unit**	**Applicable mode**		
		0–32767	1000	ms	P		
P5.44	ACC/DEC time 07	**Setting range**	**Default**	**Unit**	**Applicable mode**		
		0–32767	1200	ms	P		
P5.45	ACC/DEC time 08	**Setting range**	**Default**	**Unit**	**Applicable mode**		
		0–32767	1500	ms	P		
P5.46	ACC/DEC time 09	**Setting range**	**Default**	**Unit**	**Applicable mode**		
		0–32767	2000	ms	P		
P5.47	ACC/DEC time 10	**Setting range**	**Default**	**Unit**	**Applicable mode**		
		0–32767	2500	ms	P		
P5.48	ACC/DEC time 11	**Setting range**	**Default**	**Unit**	**Applicable mode**		
		0–32767	3000	ms	P		
P5.49	ACC/DEC time 12	**Setting range**	**Default**	**Unit**	**Applicable mode**		
		0–32767	5000	ms	P		
P5.50	ACC/DEC time 13	**Setting range**	**Default**	**Unit**	**Applicable mode**		
		0–32767	8000	ms	P		
P5.51	ACC/DEC time 14	**Setting range**	**Default**	**Unit**	**Applicable mode**		
		0–32767	50	ms	P		

P5.52	ACC/DEC time 15	Setting range	Default	Unit	Applicable mode		
		0–32767	30	ms	P		
This group of parameter specifies the acceleration or deceleration time for each segment.							
P5.37	**Data size**	16bit	**Data format**		DEC		
	Modbus address	2074, 2075	**CANopen address**		0x2525, 0x00		
P5.38	**Data size**	16bit	**Data format**		DEC		
	Modbus address	2076, 2077	**CANopen address**		0x2526, 0x00		
P5.39	**Data size**	16bit	**Data format**		DEC		
	Modbus address	2078, 2079	**CANopen address**		0x2527, 0x00		
P5.40	**Data size**	16bit	**Data format**		DEC		
	Modbus address	2080, 2081	**CANopen address**		0x2528, 0x00		
P5.41	**Data size**	16bit	**Data format**		DEC		
	Modbus address	2082, 2083	**CANopen address**		0x2529, 0x00		
P5.42	**Data size**	16bit	**Data format**		DEC		
	Modbus address	2084, 2085	**CANopen address**		0x252A, 0x00		
P5.43	**Data size**	16bit	**Data format**		DEC		
	Modbus address	2086, 2087	**CANopen address**		0x252B, 0x00		
P5.44	**Data size**	16bit	**Data format**		DEC		
	Modbus address	2088, 2089	**CANopen address**		0x252C, 0x00		
P5.45	**Data size**	16bit	**Data format**		DEC		
	Modbus address	2090, 2091	**CANopen address**		0x252D, 0x00		
P5.46	**Data size**	16bit	**Data format**		DEC		
	Modbus address	2092, 2093	**CANopen address**		0x252E, 0x00		
P5.47	**Data size**	16bit	**Data format**		DEC		
	Modbus address	2094, 2095	**CANopen address**		0x252F, 0x00		
P5.48	**Data size**	16bit	**Data format**		DEC		
	Modbus address	2096, 2097	**CANopen address**		0x2530, 0x00		
P5.49	**Data size**	16bit	**Data format**		DEC		
	Modbus address	2098, 2099	**CANopen address**		0x2531, 0x00		
P5.50	**Data size**	16bit	**Data format**		DEC		
	Modbus address	2100, 2101	**CANopen address**		0x2532, 0x00		
P5.51	**Data size**	16bit	**Data format**		DEC		
	Modbus address	2102, 2103	**CANopen address**		0x2533, 0x00		
P5.52	**Data size**	16bit	**Data format**		DEC		
	Modbus address	2104, 2105	**CANopen address**		0x2534, 0x00		

P5.53	Delay time 00	Setting range	Default	Unit	Applicable mode

		0–32767	0	ms	P		
P5.54	Delay time 01	**Setting range**	**Default**	**Unit**	**Applicable mode**		
		0–32767	100	ms	P		
P5.55	Delay time 02	**Setting range**	**Default**	**Unit**	**Applicable mode**		
		0–32767	200	ms	P		
P5.56	Delay time 03	**Setting range**	**Default**	**Unit**	**Applicable mode**		
		0–32767	400	ms	P		
P5.57	Delay time 04	**Setting range**	**Default**	**Unit**	**Applicable mode**		
		0–32767	500	ms	P		
P5.58	Delay time 05	**Setting range**	**Default**	**Unit**	**Applicable mode**		
		0–32767	800	ms	P		
P5.59	Delay time 06	**Setting range**	**Default**	**Unit**	**Applicable mode**		
		0–32767	1000	ms	P		
P5.60	Delay time 07	**Setting range**	**Default**	**Unit**	**Applicable mode**		
		0–32767	1500	ms	P		
P5.61	Delay time 08	**Setting range**	**Default**	**Unit**	**Applicable mode**		
		0–32767	2000	ms	P		
P5.62	Delay time 09	**Setting range**	**Default**	**Unit**	**Applicable mode**		
		0–32767	2500	ms	P		
P5.63	Delay time 10	**Setting range**	**Default**	**Unit**	**Applicable mode**		
		0–32767	3000	ms	P		
P5.64	Delay time 11	**Setting range**	**Default**	**Unit**	**Applicable mode**		
		0–32767	3500	ms	P		
P5.65	Delay time 12	**Setting range**	**Default**	**Unit**	**Applicable mode**		
		0–32767	4000	ms	P		
P5.66	Delay time 13	**Setting range**	**Default**	**Unit**	**Applicable mode**		

		0–32767	4500	ms	P		
P5.67	Delay time 14	**Setting range**	**Default**	**Unit**	**Applicable mode**		
		0–32767	5000	ms	P		
P5.68	Delay time 15	**Setting range**	**Default**	**Unit**	**Applicable mode**		
		0–32767	5500	ms	P		
This group of parameter specifies the delay time for each segment.							
P5.53	**Data size**	16bit	**Data format**	DEC			
	Modbus address	2106, 2107	**CANopen address**	0x2535, 0x00			
P5.54	**Data size**	16bit	**Data format**	DEC			
	Modbus address	2108, 2109	**CANopen address**	0x2536, 0x00			
P5.55	**Data size**	16bit	**Data format**	DEC			
	Modbus address	2110, 2111	**CANopen address**	0x2537, 0x00			
P5.56	**Data size**	16bit	**Data format**	DEC			
	Modbus address	2112, 2113	**CANopen address**	0x2538, 0x00			
P5.57	**Data size**	16bit	**Data format**	DEC			
	Modbus address	2114, 2115	**CANopen address**	0x2539, 0x00			
P5.58	**Data size**	16bit	**Data format**	DEC			
	Modbus address	2116, 2117	**CANopen address**	0x253A, 0x00			
P5.59	**Data size**	16bit	**Data format**	DEC			
	Modbus address	2118, 2119	**CANopen address**	0x253B, 0x00			
P5.60	**Data size**	16bit	**Data format**	DEC			
	Modbus address	2120, 2121	**CANopen address**	0x253C, 0x00			
P5.61	**Data size**	16bit	**Data format**	DEC			
	Modbus address	2122, 2123	**CANopen address**	0x253D, 0x00			
P5.62	**Data size**	16bit	**Data format**	DEC			
	Modbus address	2124, 2125	**CANopen address**	0x253E, 0x00			
P5.63	**Data size**	16bit	**Data format**	DEC			
	Modbus address	2126, 2127	**CANopen address**	0x253F, 0x00			
P5.64	**Data size**	16bit	**Data format**	DEC			
	Modbus address	2128, 2129	**CANopen address**	0x2540, 0x00			
P5.65	**Data size**	16bit	**Data format**	DEC			
	Modbus address	2130, 2131	**CANopen address**	0x2541, 0x00			
P5.66	**Data size**	16bit	**Data format**	DEC			
	Modbus address	2132, 2133	**CANopen address**	0x2542, 0x00			
P5.67	**Data size**	16bit	**Data format**	DEC			
	Modbus address	2134, 2135	**CANopen address**	0x2543, 0x00			

P5.68	Data size	16bit	Data format	DEC
	Modbus address	2136, 2137	CANopen address	0x2544, 0x00

P5.69	PTP control buffer switch	Setting range	Default	Unit	Applicable mode		
		0–1	1	-	P		

If buffering is enabled for PTP control, eight buffers can be received successively and executed sequentially.

P5.69	Data size	16bit	Data format	DEC
	Modbus address	2138, 2139	CANopen address	0x2545, 0x00

P5.70	Disk single-turn resolution	Setting range	Default	Unit	Applicable mode		
		$-(2^{31}-1)$–$(2^{31}-1)$	10000	pulse	P		

This parameter specifies the single-turn resolution of the disk that the motor drives.

P5.70	Data size	32bit	Data format	DEC
	Modbus address	2140, 2141	CANopen address	0x2546, 0x00

P5.71	Disk homing switch	Setting range	Default	Unit	Applicable mode		
		0–3	0	-	P		

This parameter specifies the homing mode of the disk.

P5.71	Data size	16bit	Data format	DEC
	Modbus address	2142, 2143	CANopen address	0x2547, 0x00

P5.72	Super multiturn mode	Setting range	Default	Unit	Applicable mode		
		0–1	0	-	P		

If the super multiturn mode is used, the turn counting number of the multiturn encoder changes from 16 bits to 32 bits, while the multiturn encoder counts a total of 2^{16} turns in most cases.

P5.72	Data size	16bit	Data format	DEC
	Modbus address	2144, 2145	CANopen address	0x2548, 0x00

P5.73	Digital trigger mode for PTP control	Setting range	Default	Unit	Applicable mode		
		0–1	0	-	P		

Set value	Description
[0]	Binary input + Terminal trigger mode
1	Single terminal trigger mode (supporting 7 PTPs only)

P5.73	**Data size**	16bit	**Data format**	DEC
	Modbus address	2146, 2147	**CANopen address**	0x2549, 0x00

P5.74	Digital output mode for PTP control	**Setting range**	**Default**	**Unit**	**Applicable mode**		
		0–4	0	-	P		

Set value	**Description**
[0]	Output before PTP arrival
1	Output after PTP arrival
2	Single-point output + Output before PTP arrival
3	Single-point output + Output after PTP arrival
4	Single-point output + Output after PTP arrival (only the control word in the absolute position supported)

P5.74	**Data size**	16bit	**Data format**	DEC
	Modbus address	2148, 2149	**CANopen address**	0x254A, 0x00

6.7 Application functions (P6 group)

P6.00	Forward low jogging speed	**Setting range**	**Default**	**Unit**	**Applicable mode**		
		0–6000	5	r/min	P		

This parameter specifies the speed of slow forward jogging, which is triggered by the forward jogging terminal and high-low jogging speed switching terminal.

P6.00	**Data size**	16bit	**Data format**	DEC
	Modbus address	2200, 2201	**CANopen address**	0x2600, 0x00

P6.01	Reverse low jogging speed	**Setting range**	**Default**	**Unit**	**Applicable mode**		
		-6000–0	-5	r/min	P		

This parameter specifies the speed of slow reverse jogging, which is triggered by the reverse jogging terminal and high-low jogging speed switching terminal.

P6.01	**Data size**	16bit	**Data format**	DEC
	Modbus address	2202, 2203	**CANopen address**	0x2601, 0x00

P6.02[1]	Data latching switch	**Setting range**	**Default**	**Unit**	**Applicable mode**		
		0–1	0	-	P		

This parameter specifies whether to enable the data latching switch. If the switch is enabled, the position information is written to the EEPROM each time the terminal is latched. However, frequent latching may cause EEPROM damage.

Set value	Description
[0]	Disable
1	Enable

P6.02[1]	Data size	16bit	Data format	DEC
	Modbus address	2204, 2205	CANopen address	0x2602, 0x00

P6.03	Position latching save mode	Setting range	Default	Unit	Applicable mode		
		0–1	0	-	P		

This parameter specifies whether to save position latching.

Set value	Description
[0]	Not save
1	Save

P6.03	Data size	16bit	Data format	DEC
	Modbus address	2206, 2207	CANopen address	0x2603, 0x00

P6.04	Forward high jogging speed	Setting range	Default	Unit	Applicable mode		
		0–6000	60	r/min	P		

This parameter specifies the speed of fast forward jogging, which is triggered by the forward jogging terminal and high-low jogging speed switching terminal.

P6.04	Data size	16bit	Data format	DEC
	Modbus address	2208, 2209	CANopen address	0x2604, 0x00

P6.05	Reverse high jogging speed	Setting range	Default	Unit	Applicable mode		
		-6000–0	-60	r/min	P		

This parameter specifies the speed of fast reverse jogging, which is triggered by the reverse jogging terminal and high-low jogging speed switching terminal.

P6.05	Data size	16bit	Data format	DEC
	Modbus address	2210, 2211	CANopen address	0x2605, 0x00

P6.06	Enable terminal jogging	Setting range	Default	Unit	Applicable mode		
		0–1	0	-	P		

This parameter specifies whether to set terminal jogging function.

Set value	Description
[0]	Invalid
1	Valid

P6.06	Data size	16bit	Data format	DEC
	Modbus address	2212, 2213	CANopen address	0x2606, 0x00

P6.20[1]	Turret function switch	Setting range	Default	Unit	Applicable mode		
		0–1	0	-	P		

This parameter specifies whether to set turret function switch.

Set value	Description
[0]	Disable
1	Enable

P6.20[1]	Data size	16bit	Data format	DEC
	Modbus address	2240, 2241	CANopen address	0x2614, 0x00

P6.21	Knives per turret	Setting range	Default	Unit	Applicable mode		
		1–128	16	piece	P		

This parameter specifies the number of knives in a turret.

P6.21	Data size	16bit	Data format	DEC
	Modbus address	2242, 2243	CANopen address	0x2615, 0x00

P6.22	Pulses per turret rotation	Setting range	Default	Unit	Applicable mode		
		2–(2^{31}-1)	10000	reference unit	P		

This parameter specifies the number of pulses needed for each turret rotation.

P6.22	Data size	32bit	Data format	DEC
	Modbus address	2244, 2245	CANopen address	0x2616, 0x00

P6.23[1]	Turret starting point	Setting range	Default	Unit	Applicable mode		
		-(2^{31}-1)–(2^{31}-1)	0	reference unit	P		

This parameter is used to set the starting point of turret.

P6.23[1]	Data size	32bit	Data format	DEC
	Modbus address	2246, 2247	CANopen address	0x2617, 0x00

P6.30[1]	Gantry synchronization function switch	Setting range	Default	Unit	Applicable mode		
		0–1	0	-	P		

This parameter specifies whether to enable the gantry synchronization function switch.

Set value	Description
[0]	Disable
1	Enable

P6.30[1]	Data size	16bit	Data format	DEC
	Modbus address	2260, 2261	CANopen address	0x261E, 0x00

P6.31	Speed control gain for gantry synchronization	Setting range	Default	Unit	Applicable mode		
		0.0–3276.7	0.0	Hz	P		

This parameter specifies the speed control gain for gantry synchronization.

P6.31	Data size	16bit	Data format	DEC
	Modbus address	2262, 2263	CANopen address	0x261F, 0x00

P6.32	Speed control integral for gantry synchronization	Setting range	Default	Unit	Applicable mode		
		0.1–1000.0	1000.0	ms	P		

This parameter specifies the time constant of the speed control integral for gantry synchronization. Please note that when this parameter is set to 1000, it indicates that the integral function is invalid.

P6.32	Data size	16bit	Data format	DEC
	Modbus address	2264, 2265	CANopen address	0x2620, 0x00

P6.33	Position control gain for gantry synchronization	Setting range	Default	Unit	Applicable mode		
		0.0–3276.7	1000.0	Hz	P		

This parameter specifies the position control gain for gantry synchronization.

P6.33	Data size	16bit	Data format	DEC
	Modbus address	2266, 2267	CANopen address	0x2621, 0x00

P6.34	Torque filter for gantry synchronization compensation	Setting range	Default	Unit	Applicable mode		
		0.00–64.00	0.00	ms	P		

This parameter specifies the torque filter time constant for gantry synchronization compensation.

P6.34	Data size	16bit	Data format	DEC

	Modbus address	2268, 2269	**CANopen address**	0x2622, 0x00

P6.35	Speed filter for gantry synchronization compensation	**Setting range**	**Default**	**Unit**	**Applicable mode**		
		0.00–64.00	0.00	ms	P		
This parameter specifies the speed filter time constant for gantry synchronization compensation.							
P6.35	**Data size**	16bit	**Data format**	DEC			
	Modbus address	2270, 2271	**CANopen address**	0x2623, 0x00			

P6.36	Bandwidth ratio for gantry synchronization control	**Setting range**	**Default**	**Unit**	**Applicable mode**		
		0.0–1000.0	0.0	%	P		
This parameter specifies the bandwidth ratio for gantry synchronization control. Bandwidth ratio = Servo bandwidth/(Servo bandwidth + Synchronization bandwidth)							
P6.36	**Data size**	16bit	**Data format**	DEC			
	Modbus address	2272, 2273	**CANopen address**	0x2624, 0x00			

P6.37[1]	Master/slave selection for gantry synchronization	**Setting range**	**Default**	**Unit**	**Applicable mode**		
		0–1	0	-	P		

This parameter specifies the master or slave for gantry synchronization.

Set value	Description
[0]	Slave
1	Master

P6.37[1]	**Data size**	16bit	**Data format**	DEC
	Modbus address	2274, 2275	**CANopen address**	0x2625, 0x00

P6.38	Retreat distance for gantry synchronization alignment	**Setting range**	**Default**	**Unit**	**Applicable mode**		
		$-(2^{31}-2)$–$(2^{31}-2)$	10000	reference unit	P		
This parameter specifies the distance that the servo retreats after contacting the two alignment sensors.							
P6.38	**Data size**	32bit	**Data format**	DEC			
	Modbus address	2276, 2277	**CANopen address**	0x2626, 0x00			

P6.39	Retreat speed for	**Setting range**	**Default**	**Unit**	**Applicable mode**

	gantry synchronization alignment	1–200	60	r/min	P		
This parameter specifies the speed at which the servo retreats after contacting the two alignment sensors.							
P6.39	**Data size**	16bit	**Data format**	DEC			
	Modbus address	2278, 2279	**CANopen address**	0x2627, 0x00			

P6.40	Approaching speed for gantry synchronization alignment	**Setting range**	**Default**	**Unit**	**Applicable mode**		
		1–60	5	r/min	P		
This parameter specifies the speed at which the servo approaches the alignment sensors again after contacting the sensors.							
P6.40	**Data size**	16bit	**Data format**	DEC			
	Modbus address	2280, 2281	**CANopen address**	0x2628, 0x00			

P6.41	Gantry alignment direction	**Setting range**	**Default**	**Unit**	**Applicable mode**		
		0–1	0	-	P		

This parameter specifies the gantry alignment direction.

Set value	Description
[0]	Forward
1	Reverse

P6.41	**Data size**	16bit	**Data format**	DEC	
	Modbus address	2282, 2283	**CANopen address**	0x2629, 0x00	

6.8 PTP control (PtP0, PtP1, and PtP2 group)

PtP0.00*[1]	Control word of segment 00	**Setting range**	**Default**	**Unit**	**Applicable mode**		
		0–0x7FFFFFFF	0x00000000	-	P		

General description:

Data bit	Symbol	Function
Bit0–3	MODE	PTP running mode.
Bit4–7	OPT	PTP attribute.
Bit8–11	ACC	ACC/DEC time index.
Bit12–15	SPD	Target speed index.

Bit16–19	DLY	Delay time index.
Bit20–23	CYL	Number of cycles for executing the current segment.
Bit24–30	JMP	The program jumps to the next segment.

Description for MODE:

MODE	Description
0	The program stops after the current segment is executed.
1	The program jumps to the next segment after the current segment is executed.
2	The program stops after circular execution. If CMD is 1, the circulation is invalid.
3	The program jumps to the next segment after circular execution. If CMD is 1, the circulation is invalid.

Description for OPT:

Data bit	Symbol	Function
Bit4	INS	Insertion. The current segment can suspend segments that are being executed or not executed.
Bit5	OVLP	Overlap. The current segment and next segment can overlap and then be executed.
Bit6–7	CMD	Position command type: 0 indicates incremental position while 1 indicates absolute position.

Description for INS

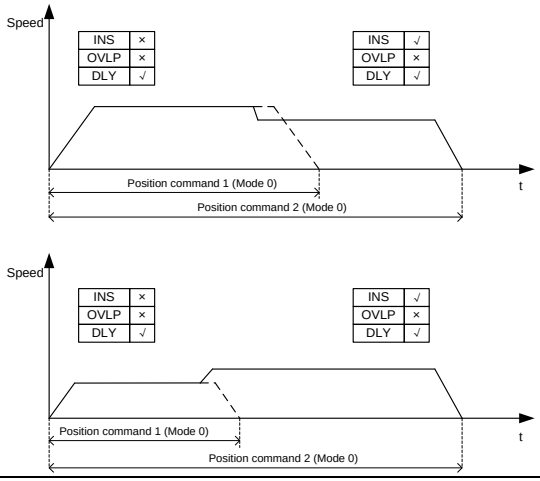

Description for OVLP

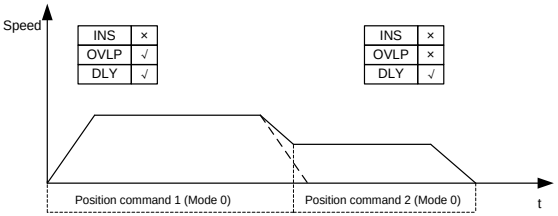

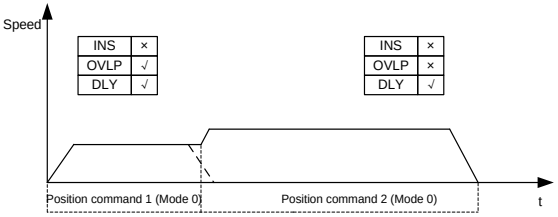

Relationship between INS and OVLP

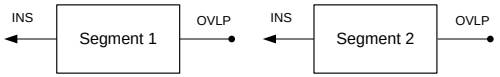

Note:

- INS indicates the current segment has execution priority over the previous one, while OVLP indicates the current segment is executed after the overlap with the next one is checked.
- INS takes priority over OVLP. For example, if both OVLP for segment 1 and INS for segment 2 are enabled, OVLP for segment 1 is invalid.
- The two segments in the reverse directions cannot overlap.

PtP0.00	**Data size**	32bit	**Data format**	HEX
	Modbus address	3200, 3201*[3]	**CANopen address**	0x2B00, 0x00*[4]

PtP0.01*[2]	Position of segment 00	**Setting range**	**Default**	**Unit**	**Applicable mode**		
		$-(2^{31}-1)$–$(2^{31}-1)$	0	reference unit	P		

This parameter specifies the position of segment 00. The CMD attribute determines the command mode of this PTP position. P0.37 is inapplicable to this PTP position.

If you want to query the function code, Modbus communication address, and CANopen communication address of the control word and position of segment n, you can calculate and query according to the following rules:

*[1]: The function code of the control word of segment n (0–127) is: PtPx.yz, in which x (0–2), y (0–9) and z (0–9) represent the hundreds, tens and ones places of 2*n, that is, it satisfies the relationship: 100*x+10*y+z = 2*n. Take segment 51 as an example, n=51, then x= 1, y = 0, z = 2,

that is, the function code of the control word of segment 51 is PtP1.02.

*2: The function code of the position of segment n (0–127) is: PtPu.vw, in which u (0–2), v (0–9) and w (0–9) represent the hundreds, tens, and ones places of 2*n+1, that is, it satisfies the relationship: 100*x+10*y+z = 2*n+1. Take segment 51 as an example, n=51, then u = 1, v = 0, w = 3, that is, the function code of the position of segment 51 is PtP1.03.

*3: The Modbus communication address of the control word of segment n is: 3200+4*n, 3201+4*n, and the Modbus communication address of the position of segment n is: 3202+4*n, 3203+ 4*n. Take segment 51 as an example, n=51, then the Modbus communication address of control word of the segment is: 3200+4*51, 3201+4*51, that is, the Modbus communication address of the control word of segment 51 is: 3404, 3405. The Modbus communication address of the position of the segment is: 3202+4*51, 3203+4*51, that is, the Modbus communication address of the control word of segment 51 is: 3406, 3407.

*4: The CANopen communication address of the control word of segment n is: 11008+256*x+10*y+z (need to be converted to be hexadecimal), 0x00, and that of the position of segment n is: 11008+256*u+10*v+w (need to be converted to be hexadecimal), 0x00. Take segment 51 as an example, n=51, then the function code of the corresponding control word is PtP1.02, x=1, y=0, z=2, so the CANopen communication address of the control word of the segment is: 11008+256*1+10*0+2=11266 (11266 is converted to be 0x2C02 in hexadecimal format), 0x00, that is, the CANopen communication address of the control word of segment 51 is: 0x2C02, 0x00. The function code of the position of the segment is PtP1.03, u=1, v=0, w=3, so the CANopen communication address of the position of the segment is 11008+256*1+10*0+3=11267 (11267 is converted to be 0x2C03 in hexadecimal format), 0x00, that is, the CANopen communication address of the position of segment 51 is: 0x2C03, 0x00.

PtP0.01	**Data size**	32bit	**Data format**	DEC
	Modbus address	3202, 3203*3	**CANopen address**	0x2B01, 0x00*4

6.9 State monitoring

6.9.1 User monitoring (R0 group)

R0.00	Motor rotation speed	**Setting range**	**Precision**	**Unit**
		-9999.9–9999.9	0.1	r/min

This parameter displays the actual speed of the servo motor.
This parameter is processed with filtering when displaying.

R0.00	**Data size**	32bit	**Data format**	DEC
	Modbus address	4000, 4001	**CANopen address**	0x3000, 0x00

R0.01	Speed command	**Setting range**	**Precision**	**Unit**
		-9999.9–9999.9	0.1	r/min

This parameter displays the current speed command of the servo motor.

Note: If the ACC/DEC time function is enabled, the command indicates the command that is executed after the ACC/DEC.

R0.01	Data size	32bit	Data format	DEC
	Modbus address	4002, 4003	CANopen address	0x3001, 0x00

R0.02	Accumulated feedback pulses	Setting range	Precision	Unit
		$-(2^{63}-1)$–$(2^{63}-1)$	1	reference unit

This parameter accumulates and displays the feedback pulses (with signs) of the servo motor. The unit is the user unit.

R0.02	Data size	64bit	Data format	DEC
	Modbus address	4004, 4005, 4006, 4007	CANopen address	0x3002, 0x00 0x3002, 0x01

R0.03	Accumulated command pulses	Setting range	Precision	Unit
		$-(2^{63}-1)$–$(2^{63}-1)$	1	reference unit

This parameter accumulates and displays the position command pulses with signs. The unit is the user unit.

R0.03	Data size	64bit	Data format	DEC
	Modbus address	4008, 4009, 4010, 4011	CANopen address	0x3003, 0x00 0x3003, 0x01

R0.04	Residual pulses	Setting range	Precision	Unit
		$-(2^{31}-1)$–$(2^{31}-1)$	1	reference unit

This parameter displays the residual pulses with signs of the position deviation counter. The unit is the user unit.

R0.04	Data size	32bit	Data format	DEC
	Modbus address	4012, 4013	CANopen address	0x3004, 0x00

R0.05	Hybrid control deviation	Setting range	Precision	Unit
		$-(2^{31}-1)$–$(2^{31}-1)$	1	reference unit

This parameter displays the tolerance with a sign between the encoder feedback position and linear encoder feedback position when the fully-closed loop function is enabled. The unit is the user unit.

R0.05	Data size	32bit	Data format	DEC
	Modbus address	4014, 4015	CANopen address	0x3005, 0x00

R0.06	Current torque	Setting range	Precision	Unit
		-500.0–500.0	0.1	%

This parameter displays the current torque, which is expressed in percentage, assuming the

servo motor rated torque is 100.0%.				
R0.06	**Data size**	16bit	**Data format**	DEC
	Modbus address	4016, 4017	**CANopen address**	0x3006, 0x00

R0.07	Main circuit DC voltage	**Setting range**	**Precision**	**Unit**
		0.0–1000.0	0.1	V
This parameter displays the DC bus voltage of the main circuit power.				
R0.07	**Data size**	16bit	**Data format**	DEC
	Modbus address	4018, 4019	**CANopen address**	0x3007, 0x00

R0.09	Output voltage	**Setting range**	**Precision**	**Unit**
		0.0–1000.0	0.1	Vrms
This parameter displays the present output line voltage.				
R0.09	**Data size**	16bit	**Data format**	DEC
	Modbus address	4022, 4023	**CANopen address**	0x3009, 0x00

R0.10	Output current	**Setting range**	**Precision**	**Unit**
		0.00–1000.00	0.01	Arms
This parameter displays the valid value of the present output line current.				
R0.10	**Data size**	32bit	**Data format**	DEC
	Modbus address	4024, 4025	**CANopen address**	0x300A, 0x00

R0.11	Drive temperature	**Setting range**	**Precision**	**Unit**
		-55.0–180.0	0.1	°C
This parameter displays the present temperature of the drive IGBT module.				
R0.11	**Data size**	16bit	**Data format**	DEC
	Modbus address	4026, 4027	**CANopen address**	0x300B, 0x00

R0.12	Torque limit	**Setting range**	**Precision**	**Unit**
		-500.0–500.0	0.1	%
This parameter displays the actual torque limit, which is expressed in percentage, assuming the				
R0.12	**Data size**	16bit	**Data format**	DEC
	Modbus address	4028, 4029	**CANopen address**	0x300C, 0x00

R0.13	Encoder feedback value	**Setting range**	**Precision**	**Unit**
		0–(2^{31}-1)	1	pulse
This parameter displays the current feedback value of the encoder.				
R0.13	**Data size**	32bit	**Data format**	DEC

	Modbus address	4030, 4031	**CANopen address**	0x300D, 0x00

R0.14	Rotor position relative to Z pulse	**Setting range**	**Precision**	**Unit**
		$0–(2^{31}-1)$	1	pulse
This parameter displays the absolute mechanical position of the motor in one encoder rotation cycle. The unit is encoder resolution.				
R0.14	**Data size**	32bit	**Data format**	DEC
	Modbus address	4032, 4033	**CANopen address**	0x300E, 0x00

R0.15	Load inertia ratio	**Setting range**	**Precision**	**Unit**
		0–10000	1	%
This parameter displays the ratio of the load rotation inertia on the servo motor shaft to that on the servo motor.				
R0.15	**Data size**	16bit	**Data format**	DEC
	Modbus address	4034, 4035	**CANopen address**	0x300F, 0x00

R0.16	Output power	**Setting range**	**Precision**	**Unit**
		-500.0–500.0	0.1	%
This parameter displays the current output mechanical power, which is expressed in percentage, assuming the servo motor rated power is 100%. **Note:** A negative value indicates the motor is in power generation state.				
R0.16	**Data size**	16bit	**Data format**	DEC
	Modbus address	4036, 4037	**CANopen address**	0x3010, 0x00

R0.17	Motor load ratio	**Setting range**	**Precision**	**Unit**
		0.0–500.0	0.1	%
This parameter displays the actual motor load ratio, which is expressed in percentage, assuming				
R0.17	**Data size**	16bit	**Data format**	DEC
	Modbus address	4038, 4039	**CANopen address**	0x3011, 0x00

R0.18	Numerator of actual electronic gear ratio	**Setting range**	**Precision**	**Unit**
		$0–(2^{31}-1)$	1	-
This parameter displays the numerator of the actual electronic gear ratio.				
R0.18	**Data size**	32bit	**Data format**	DEC
	Modbus address	4040, 4041	**CANopen address**	0x3012, 0x00

R0.19	Denominator of actual electronic gear ratio	**Setting range**	**Precision**	**Unit**
		$1–(2^{31}-1)$	1	-

This parameter displays the denominator of actual electronic gear ratio.

R0.19	Data size	32bit	Data format	DEC
	Modbus address	4042, 4043	CANopen address	0x3013, 0x00

R0.20	Position command speed	Setting range	Precision	Unit
		-9999.9–9999.9	0.1	r/min

This parameter displays the speed corresponding to a position command.

R0.20	Data size	32bit	Data format	DEC
	Modbus address	4044, 4045	CANopen address	0x3014, 0x00

R0.21	Motor speed (filtering)	Setting range	Precision	Unit
		-9999.9–9999.9	0.1	r/min

This parameter displays the rotation speed that is used after filtering is executed for the servo

R0.21	Data size	32bit	Data format	DEC
	Modbus address	4046, 4047	CANopen address	0x3015, 0x00

R0.22	PTP state	Setting range	Precision	Unit
		-1–4223	1	-

This parameter displays the status of PTP control. The value -1 indicates PTP control is not executed. Any value from 0 to 127 indicates the number of segment that is being executed. A segment number plus 4096 indicates the current segment has been executed.

R0.22	Data size	16bit	Data format	DEC
	Modbus address	4048, 4049	CANopen address	0x3016, 0x00

R0.23	Encoder absolute position feedback	Setting range	Precision	Unit
		$-(2^{31}-1)$–$(2^{31}-1)$	1	pulse

This parameter displays the encoder absolute position feedback. After absolute position clearing

R0.23	Data size	32bit	Data format	DEC
	Modbus address	4050, 4051	CANopen address	0x3017, 0x00

R0.24	Encoder EEPROM data state	Setting range	Precision	Unit
		0–3	-	-

This parameter displays the EEPROM state of the absolute encoder. If motor parameter data is not found in EEPROM or incorrect, the system uses the internal motor parameters of the drive.

Set value	Meaning
[0]	No EEPROM
1	No data found in the

		EEPROM
	2	EEPROM data error
	3	Data in the EEPROM is valid.

R0.24	Data size	16bit	Data format	DEC
	Modbus address	4052, 4053	CANopen address	0x3018, 0x00

R0.25	Turns of multiturn encoder	Setting range	Precision	Unit
		-32768–32767	1	-

This parameter displays the number of turns of the multiturn encoder.

R0.25	Data size	16bit	Data format	DEC
	Modbus address	4054, 4055	CANopen address	0x3019, 0x00

R0.26	Available encoder type	Setting range	Precision	Unit
		0–6	-	-

This parameter displays the encoder type supported by hardware circuit.

Set value	Meaning
[3]	Photoelectric encoder
5	Rotary transformer
Other	(Reserved)

R0.26	Data size	16bit	Data format	DEC
	Modbus address	4056, 4057	CANopen address	0x301A, 0x00

R0.27	EtherCAT clock synchronous correction state	Setting range	Precision	Unit
		0–1	-	-

This parameter displays whether the drive internal clock has been synchronized with DC Sync0 in DC mode which is used for EtherCAT communication synchronization.

Display	Meaning
[0]	Not synchronized
1	Synchronized

R0.27	Data size	16bit	Data format	DEC
	Modbus address	4058, 4059	CANopen address	0x301B, 0x00

R0.28	State of CANopen state machine	Setting range	Precision	Unit
		0–18	-	-

This parameter displays the current state of the internal CANopen state machine when CAN is used for communication or that of the CANopen over EtherCAT (CoE) state machine when EtherCAT is used for communication.

Display	Communication method	Meaning
[0]	-	Invalid
1	CAN	Init
2		Pre-Op
5		Stop
8		Op (that is, Operational)
11	EtherCAT	Init
12		Pre-Op
14		Safe-Op
18		Op (that is, Operational)

R0.28	Data size	16bit	Data format	DEC
	Modbus address	4060, 4061	CANopen address	0x301C, 0x00

R0.30	System state	Setting range	Precision	Unit
		0–6	-	-

This parameter displays the system state of the drive.

Set value	Meaning
[0]	Initialization
1	Main power supply power-on
2	Magnetic pole not determined
3	Ready
4	Bootstrapped charging
5	Run
6	Forced to stop
7	Fault
8	STO-In

R0.30	Data size	16bit	Data format	DEC
	Modbus address	4064, 4065	CANopen address	0x301E, 0x00

R0.31	IGBT state	Setting range	Precision	Unit
		0–1	-	-

This parameter displays the IGBT state.

Set value	Meaning
[0]	Closed
1	Open

R0.31	Data size	16bit	Data format	DEC
	Modbus address	4066, 4067	CANopen address	0x301F, 0x00

R0.32	Current mode	Setting range	Precision	Unit
		0–2	-	-

This parameter displays the control mode that the drive uses currently.

Set value	Meaning
[0]	Position mode
1	Speed mode
2	Torque mode

R0.32	Data size	16bit	Data format	DEC
	Modbus address	4068, 4069	CANopen address	0x3020, 0x00

R0.33	Power-on time	Setting range	Precision	Unit
		0–(2^{31}-1)	1	s

This parameter displays the total power-on time used by the drive.

R0.33	Data size	32bit	Data format	DEC
	Modbus address	4070, 4071	CANopen address	0x3021, 0x00

R0.34	Running time	Symbol	Precision	Unit
		0–(2^{31}-1)	1	s

This parameter displays the time used by the drive to enable the servo.

R0.34	Data size	32bit	Data format	DEC
	Modbus address	4072, 4073	CANopen address	0x3022, 0x00

R0.35	DSP software version	Setting range	Precision	Unit
		0.00–10.00	0.01	-

This parameter displays the DSP version number.

R0.35	Data size	16bit	Data format	DEC
	Modbus address	4074, 4075	CANopen address	0x3023, 0x00

R0.36	FPGA software version	Setting range	Precision	Unit

		0.00–10.00	0.01	-
This parameter displays the FPGA version number.				
R0.36	**Data size**	16bit	**Data format**	DEC
	Modbus address	4076, 4077	**CANopen address**	0x3024, 0x00

R0.38	Drive SN 1	**Setting range**	**Precision**	**Unit**
		0–65535	1	-
This parameter displays serial number 1 of the drive.				
R0.38	**Data size**	16bit	**Data format**	DEC
	Modbus address	4080, 4081	**CANopen address**	0x3026, 0x00

R0.39	Drive SN 2	**Setting range**	**Precision**	**Unit**
		0–65535	1	-
This parameter displays serial number 2 of the drive.				
R0.39	**Data size**	16bit	**Data format**	DEC
	Modbus address	4082, 4083	**CANopen address**	0x3027, 0x00

R0.40	Drive SN 3	**Setting range**	**Precision**	**Unit**
		0–65535	1	-
This parameter displays serial number 3 of the drive.				
R0.40	**Data size**	16bit	**Data format**	DEC
	Modbus address	4084, 4085	**CANopen address**	0x3028, 0x00

R0.41	Drive SN 4	**Setting range**	**Precision**	**Unit**
		0–65535	1	-
This parameter displays serial number 4 of the drive.				
R0.41	**Data size**	16bit	**Data format**	DEC
	Modbus address	4086, 4087	**CANopen address**	0x3029, 0x00

R0.42	Drive SN 5	**Setting range**	**Precision**	**Unit**
		0–65535	1	-
This parameter displays serial number 5 of the drive.				
R0.42	**Data size**	16bit	**Data format**	DEC
	Modbus address	4088, 4089	**CANopen address**	0x302A, 0x00

R0.43	Drive SN 6	**Setting range**	**Precision**	**Unit**
		0–65535	1	-
This parameter displays serial number 6 of the drive.				

R0.43	Data size	16bit	Data format	DEC
	Modbus address	4090, 4091	CANopen address	0x302B, 0x00

R0.44	Absolute position of linear encoder (2nd encoder) in single circle	Setting range	Precision	Unit
		0–(2^{31}-1)	1	pulse
This parameter displays the feedback value of absolute position of linear encoder (2nd encoder) in				
R0.44	Data size	32bit	Data format	DEC
	Modbus address	4092, 4093	CANopen address	0x302C, 0x00

R0.45	Speed feedback of 2nd encoder	Setting range	Precision	Unit
		-9999.9–9999.9	0.1	r/min
This parameter displays the actual speed of the servo motor.				
R0.45	Data size	32bit	Data format	DEC
	Modbus address	4094, 4095	CANopen address	0x302D, 0x00

R0.46	Detected speed of speed observer	Setting range	Precision	Unit
		-9999.9–9999.9	0.1	r/min
This parameter displays the detected speed of the speed observer.				
R0.46	Data size	32bit	Data format	DEC
	Modbus address	4096, 4097	CANopen address	0x302E, 0x00

R0.47	Feedback speed of speed observer	Setting range	Precision	Unit
		-9999.9–9999.9	0.1	r/min
This parameter displays the feedback speed of the speed observer.				
R0.47	Data size	32bit	Data format	DEC
	Modbus address	4098, 4099	CANopen address	0x302F, 0x00

R0.48	Observing disturbance torque of disturbance observer	Setting range	Precision	Unit
		-1000.0–1000.0	0.1	%
This parameter displays the compensation torque of the disturbance observer.				
R0.48	Data size	32bit	Data format	DEC
	Modbus address	4100, 4101	CANopen address	0x3030, 0x00

R0.49	Compensation value of fully-closed-loop vibration suppressor	Setting range	Precision	Unit
		-9999.9–9999.9	0.1	r/min

This parameter displays the compensation value of the fully-closed loop vibration suppressor.				
R0.49	**Data size**	32bit	**Data format**	DEC
	Modbus address	4102, 4103	**CANopen address**	0x3031, 0x00

R0.51	Observe load inertia ratio in real time	**Setting range**	**Precision**	**Unit**
		0–10000	1	%
This parameter displays the load inertia ratio observed in real time.				
R0.51	**Data size**	16bit	**Data format**	DEC
	Modbus address	4106, 4107	**CANopen address**	0x3033, 0x00

R0.52	Accumulated linear encoder (2nd encoder) position feedback (32-bit)	**Setting range**	**Precision**	**Unit**
		$-(2^{31}-1)$–$(2^{31}-1)$	1	pulse
This parameter accumulates and displays the 32-bit absolute position feedback from the linear encoder (2nd encoder). It can be read quickly. If the data range exceeds 32 bits, it is replaced by R0.57.				
R0.52	**Data size**	32bit	**Data format**	DEC
	Modbus address	4108, 4109	**CANopen address**	0x3034, 0x00

R0.53	Gantry synchronization position deviation	**Setting range**	**Precision**	**Unit**
		$-(2^{31}-1)$–$(2^{31}-1)$	1	reference unit
This parameter displays the gantry synchronization position deviation.				
R0.53	**Data size**	32bit	**Data format**	DEC
	Modbus address	4110, 4111	**CANopen address**	0x3035, 0x00

R0.54	Linear encoder (2nd encoder) position feedback value	**Setting range**	**Precision**	**Unit**
		0–$(2^{31}-1)$	1	pulse
This parameter displays the feedback position of the linear encoder (2nd encoder).				
R0.54	**Data size**	32bit	**Data format**	DEC
	Modbus address	4112, 4113	**CANopen address**	0x3036, 0x00

R0.55	Encoder turn deviation after multiturn position cleared	**Setting range**	**Precision**	**Unit**
		$-(2^{31}-1)$–$(2^{31}-1)$	1	-
This parameter displays the encoder turn deviation after multiturn positions are cleared.				

R0.55	Data size	32bit	Data format	DEC
	Modbus address	4114, 4115	CANopen address	0x3037, 0x00

R0.56	Encoder feedback deviation after multiturn position cleared	Setting range	Precision	Unit
		$-(2^{31}-1)$–$(2^{31}-1)$	1	pulse
This parameter displays the encoder feedback deviation after multiturn positions are cleared.				
R0.56	Data size	32bit	Data format	DEC
	Modbus address	4116, 4117	CANopen address	0x3038, 0x00

R0.57	Accumulated linear encoder (2nd encoder) position feedback (64-bit)	Setting range	Precision	Unit
		$-(2^{63}-1)$–$(2^{63}-1)$	1	pulse
Accumulated linear encoder (2nd encoder) position feedback, 64 bits				
R0.57	Data size	64bit	Data format	DEC
	Modbus address	4118, 4119, 4120, 4121	CANopen address	0x3039, 0x00 0x3039, 0x01

R0.60	Medium-power motor temperature	Setting range	Precision	Unit
		-55–200	1	°C
This parameter displays the current temperature of the medium-power motor with temperature resistor KTY84-130. Temperature is sampled only when P4.45 is not zero.				
R0.60	Data size	32bit	Data format	DEC
	Modbus address	4126, 4127	CANopen address	0x303C, 0x00

R0.61	Ambient temperature	Setting range	Precision	Unit
		-55.0–180.0	0.1	°C
This parameter displays the current ambient temperature.				
R0.61	Data size	16bit	Data format	DEC
	Modbus address	4028, 4029	CANopen address	0x303D, 0x00

R0.99	Fault code	Setting range	Precision	Unit
		-32768–32767	1	-
This parameter displays the fault code, in which the thousands and hundreds digits are the main				
R0.99	Data size	16bit	Data format	DEC
	Modbus address	4198, 4199	CANopen address	0x3063, 0x00

6.9.2 I/O monitoring (R1 group)

R1.00	Digital input state	Setting range	Precision	Unit
		0x000–0x3FF	-	-
R1.01	Digital output state	Setting range	Precision	Unit
		0x00–0x3F	-	-

This value is arranged in digital order and indicates the hex number of digital terminal state. When a terminal is in ON state, its corresponding bit is 1. When a terminal is in OFF state, its corresponding bit is 0. Then, this binary number is converted into a hexadecimal number. For example, 000000001011 is denoted as 0x00B.

The digital input state is denoted as 3-digit hexadecimal number. The arrangement sequence of the digital input is listed as below: (the digits not listed are filled with 0).

BIT9	BIT	BIT	BIT6	BIT5	BIT4	BIT3	BIT2	BIT1	BIT0
SI10	SI9	SI8	SI7	SI6	SI5	SI4	SI3	SI2	SI1

The digital output state is denoted as 2-digit hexadecimal number. The arrangement sequence of the digital output is listed as below: (the digits not listed are filled with 0)

BIT5	BIT4	BIT3	BIT2	BIT1	BIT0
SO6	SO5	SO4	SO3	SO2	SO1

R1.00	Data size	16bit	Data format	HEX
	Modbus address	4200, 4201	CANopen address	0x3100, 0x00
R1.01	Data size	16bit	Data format	HEX
	Modbus address	4202, 4203	CANopen address	0x3101, 0x00

R1.02	Original voltage of analog input 1	Setting range	Precision	Unit
		-10.000–10.000	0.001	V

This parameter displays the unprocessed voltage of the analog input channel 1.

R1.02	Data size	32bit	Data format	DEC
	Modbus address	4204, 4205	CANopen address	0x3102, 0x00

R1.03	Original voltage of analog input 2	Setting range	Precision	Unit
		-10.000–10.000	0.001	V

This parameter displays the unprocessed voltage of the analog input channel 2.

R1.03	Data size	32bit	Data format	DEC
	Modbus address	4206, 4207	CANopen address	0x3103, 0x00

R1.05	Voltage of analog input 1	Setting range	Precision	Unit
		-10.000–10.000	0.001	V

This parameter displays the corrected voltage of the analog input channel 1.

R1.05	Data size	32bit	Data format	DEC
	Modbus address	4210, 4211	CANopen address	0x3105, 0x00

R1.06	Voltage of analog input 2	Setting range	Precision	Unit
		-10.000–10.000	0.001	V
This parameter displays the corrected voltage of the analog input channel 2.				
R1.06	Data size	32bit	Data format	DEC
	Modbus address	4212, 4213	CANopen address	0x3106, 0x00

R1.08	Voltage of analog output 1	Setting range	Precision	Unit
		-10.000–10.000	0.001	V
This parameter displays the output voltage value after offset treatment of analog output channel				
R1.08	Data size	32bit	Data format	DEC
	Modbus address	4216, 4217	CANopen address	0x3108, 0x00

R1.09	Voltage of analog output 2	Setting range	Precision	Unit
		-10.000–10.000	0.001	V
This parameter displays the output voltage value after offset treatment of analog output channel				
R1.09	Data size	32bit	Data format	DEC
	Modbus address	4218, 4219	CANopen address	0x3109, 0x00

R1.11	Accumulated input pulses	Setting range	Precision	Unit
		$-(2^{31}-1)$–$(2^{31}-1)$	1	reference unit
This parameter accumulates and displays the number of pulses that are received from the				
R1.11	Data size	32bit	Data format	DEC
	Modbus address	4222, 4223	CANopen address	0x310B, 0x00

R1.12	Pulse position command	Setting range	Precision	Unit
		$-(2^{31}-1)$–$(2^{31}-1)$	1	reference unit
This parameter displays the position command value in each pulse input detection cycle				
R1.12	Data size	32bit	Data format	DEC
	Modbus address	4224, 4225	CANopen address	0x310C, 0x00

R1.13	Pulse speed command	Setting range	Precision	Unit
		-10000.0–10000.0	0.1	r/min
This parameter displays the speed command corresponding to the pulse position command.				
R1.13	Data size	32bit	Data format	DEC
	Modbus address	4226, 4227	CANopen address	0x310D, 0x00

R1.14	Analog compensation speed	Setting range	Precision	Unit
		-10000.0–10000.0	0.1	r/min
This parameter displays the analog compensation speed.				
R1.14	Data size	32bit	Data format	DEC
	Modbus address	4228, 4229	CANopen address	0x310E, 0x00

R1.15	Analog compensation torque	Setting range	Precision	Unit
		-1000.0–1000.0	0.1	%
This parameter displays the analog compensation torque.				
R1.15	Data size	32bit	Data format	DEC
	Modbus address	4230, 4231	CANopen address	0x310F, 0x00

R1.16	DI-captured encoder value	Setting range	Precision	Unit
		$-(2^{31}-1)$–$(2^{31}-1)$	1	pulse
This parameter displays the encoder value captured through DI input.				
R1.16	Data size	32bit	Data format	DEC
	Modbus address	4232, 4233	CANopen address	0x3110, 0x00

6.9.3 Fault recording (R3 group)

R3.00	Fault code record	Setting range	Precision	Unit
		-	-	-
This parameter displays the code of the currently-read fault record. It contains the information on the last fault by default.				

R3.01	Power-on time when fault occurs	Setting range	Precision	Unit
		0–$(2^{31}-1)$	1	h
This parameter displays the power-on time when a fault occurs.				

R3.02	Running time when fault occurs	Setting range	Precision	Unit
		0–$(2^{31}-1)$	1	h
This parameter displays the running time when a fault occurs.				

R3.03	Motor speed when fault occurs	Setting range	Precision	Unit
		-20000–20000	1	r/min
This parameter displays the motor speed when a fault occurs.				

R3.04	Speed command when fault occurs	Setting range	Precision	Unit
		-20000–20000	1	r/min

This parameter displays the speed command when a fault occurs.

		Setting range	Precision	Unit
R3.05	Feedback pulse accumulation when fault occurs	$-(2^{63}-1)$–$(2^{63}-1)$	1	reference unit

This parameter displays the feedback pulse accumulation when a fault occurs.

		Setting range	Precision	Unit
R3.06	Command pulse accumulation when fault occurs	$-(2^{63}-1)$–$(2^{63}-1)$	1	reference unit

This parameter displays the command pulse accumulation when a fault occurs.

		Setting range	Precision	Unit
R3.07	Residual pulses when fault occurs	$-(2^{31}-1)$–$(2^{31}-1)$	1	reference unit

This parameter displays the residual pulses when a fault occurs.

		Setting range	Precision	Unit
R3.08	Current torque when fault occurs	-500.0–500.0	0.1	%

This parameter displays the torque output when a fault occurs.

		Setting range	Precision	Unit
R3.09	Main circuit DC voltage when fault occurs	0.0–1000.0	0.1	V

This parameter displays the main circuit DC voltage when a fault occurs.

		Setting range	Precision	Unit
R3.10	Output voltage when fault occurs	0.0–1000.0	0.1	Vrms

This parameter displays the valid value of the output line voltage when a fault occurs.

		Setting range	Precision	Unit
R3.11	Output current when fault occurs	0.00–1000.00	0.01	Arms

This parameter displays the valid value of the output line current when a fault occurs.

		Setting range	Precision	Unit
R3.20	Last fault code	-	-	-

This parameter displays the fault code of the last fault.

		Setting range	Precision	Unit
R3.21	2nd-last fault code	-	-	-

This parameter displays the fault code of the 2nd-last fault.

R3.22	3rd-last fault code	Setting range	Precision	Unit
		-	-	-
This parameter displays the fault code of the 3rd-last fault.				

R3.23	4th-last fault code	Setting range	Precision	Unit
		-	-	-
This parameter displays the fault code of the 4th-last fault.				

R3.24	5th-last fault code	Setting range	Precision	Unit
		-	-	-
This parameter displays the fault code of the 5th-last fault.				

R3.25	6th-last fault code	Setting range	Precision	Unit
		-	-	-
This parameter displays the fault code of the 6th-last fault.				

R3.26	7th-last fault code	Setting range	Precision	Unit
		-	-	-
This parameter displays the fault code of the 7th-last fault.				

R3.27	8th-last fault code	Setting range	Precision	Unit
		-	-	-
This parameter displays the fault code of the 8th-last fault.				

R3.28	9th-last fault code	Setting range	Precision	Unit
		-	-	-
This parameter displays the fault code of the 9th-last fault.				

R3.29	10th-last fault code	Setting range	Precision	Unit
		-	-	-
This parameter displays the fault code of the 10th-last fault.				

7 Commissioning

7.1 Operation instruction of inertia identification

Inertia identification is divided into online mode and offline mode.

1. Online inertia identification

It is necessary to set following parameters when online inertia identification is selected:

1) P1.00;

2) P1.08.

If P1.00 and P1.08 are greater than 0, the online mode is valid. If the inertia identification requirements are met, (1. The speed is larger than 150r/min; 2. The ACC time is longer than 20 ms; 3. The continuous acceleration range is more than 150r/min; 4. In 0.3 seconds, the speed can accelerate from 0r/min to 3000 r/min), the identification result will be updated to P1.01 and written into EEPROM in every 30 minutes automatically.

2. Offline inertia identification

It is necessary to set following parameters when offline inertia identification is selected:

1) P1.05;

2) P1.06;

3) P1.07.

The offline mode is available by the auxiliary function EF-JId of the panel operation. Refer to chapter 5.2.5.5 for the EF-JId procedure. The offline mode is not affected by P1.00 and P1.08.

Before executing the auxiliary function of EF-JId, set P1.05 according to the operation mode of the motor, set P1.06 according to the rotating cycle and set P1.07 according to the mechanical rigidity. The stronger the mechanical rigidity, the smaller the ACC/DEC time constant. Set P1.05 to 1 or 2. The smaller the value of P1.06 and P1.07 is, the more correct the identification result.

When executing the auxiliary function of EF-JId, please ensure P1.05 and P1.06 meet the needs; otherwise, there may be damage to the machine. Press Mode key can stop the execution.

If the execution EF-JId is finished normally, the identification result will be saved into P1.01 automatically. If there is fault, P1.01 will keep the result before identification. If it reports Er25-7, increase P1.06 or reduce P1.07.

If the following occurs onsite.

1) Mechanical rigidity is low.

2) The load inertia changes too fast.

3) There is non-linear characteristics such as clearance.

4) The external disturbance changes too fast.

The accuracy of the inertia identification result will be affected.

7.2 General methods for adjusting parameters

There are two kinds of parameters adjustment:

Method 1: Automatic adjustment setting of rigidity choice

You need to evaluate the load inertia ratio manually and set the servo system rigidity, which has 32 options from 0 to 31. Then different loop gains can be set automatically.

This method features quick adjusting servo system responsiveness.

Adjust the system rigidity based on the actual situation. The recommended rigidity settings are as follows:

Mechanical structure	Rigidity setting
Large transfer or transmission equipment	0–13
Belt drive mechanism	5–16
Ball screw + belt drive	5–16
Manipulator	15–22
Direct ball screw or rigid body	18–25

A greater rigidity value indicates quicker response, but it increases the possibility to cause noise and vibration. You need to check the mechanical device actions before the setting.

If the setting cannot meet your requirements, use manual adjustment.

Method 1: Automatic adjustment

If the servo system encounters vibration or control performance cannot meet requirements, you can adjust speed loop and position loop parameters to eliminate vibration or improve performance.

You can adjust the following parameters manually:

Speed loop gain: It determines the response speed of the speed loop. If the mechanical system has no vibration, a greater speed loop gain indicates a quicker response speed.

Speed loop integral time constant: The speed loop contains the integral component, which can respond to minor input. The integral component may delay servo system jobs. A greater time constant indicates slower response, increasing positioning time. If load inertia is heavy or servo system has a great possibility to encounter vibration, this time constant must be great. Otherwise, the servo system may encounter vibration.

Torque command filtering: The mechanical system may encounter resonance, which causes sharp vibration noise. At this time, you must use the notch filter to eliminate resonance.

Position loop gain: It determines the servo system responsiveness. A greater position loop gain indicates a quicker response speed, reducing positioning time. If you need to set the gain to a great value, the rigidity and natural frequency of the mechanical system must be high.

Generally, the speed loop gain must be greater than the position loop gain. If the position loop gain is much greater than the speed loop, the system may be overshot with the function of step signals, therefore deteriorating system performance. System parameters are restricted mutually. If only the position loop gain is increased, the commands output from the position loop may be unstable, which may cause unstable responsiveness of the entire servo system. Perform adjusting in the following sequence:

1. Set the position loop gain to a small value and increase it to a value as large as possible without causing abnormal noise or vibration.
2. Decrease the speed loop gain gradually and increase the position loop gain as much as allowed without causing overshooting or vibration.
3. Decrease the speed loop integral time constant as much as possible without causing vibration since this time constant is determined by positioning time.
4. Adjust the position loop gain, speed loop gain, and speed loop integral time constant slightly to achieve optimum settings.

Hereunder we illustrate several typical cases (in each case, only one parameter is changed relative to a case when the parameters are appropriate):

- Appropriate parameter settings

In this case, parameters are set appropriately, the motor speed is compliant with the position command, the speed is not overshot, and positioning time is short.

- Speed loop integral time constant too small

The servo drive speed loop must respond quickly. If the speed fluctuates, the speed loop integral time constant is too small, which deteriorates the speed loop stableness. Therefore, the running is unstable.

- Speed loop integral time constant too large

The difference from the case of appropriate parameter settings is not noticeable. The speed loop integral has no significant impact when the speed follows up the position command, but the response time of the speed loop is impacted if the speed loop integral time constant is too large.

- Speed loop gain too high

In this case, the motor speed fluctuates. If the speed loop integral time is too short, the similar impact is caused. You must increase both the speed loop gain and the speed loop integral time. Otherwise, the servo system may encounter vibration.

- Speed loop gain too low

If the speed loop gain is decreased, the motor speed fluctuates. According to the comparison the case of speed loop gain too large, the fluctuation frequency of the motor speed is lower in this case, which indicates that increasing the speed loop gain improves the system working frequency, control system responsiveness, and anti-interference.

- Position loop gain too low

In the servo system, the working frequency of the position loop is lower than that of the speed loop. If the position loop gain is too low, the system cannot counteract the position deviation that is caused during speed responding, which delays the interval at which the motor speed follows up the position command.

- Position loop gain too high

In the position servo system, the position loop gain also impacts stableness. If the position loop gain is too high, the motor speed fluctuates. According to the comparison with the case of position loop gain too low, the delay with which the motor speed follows up the position command is decreased in this case.

- Position loop gain too low

If the position loop gain is too low, the motor speed lags behind the position command noticeably, and positioning time is prolonged. The accuracy and response performance of the positioning system are impacted seriously.

7.2.1 Gain adjustment of position mode

- Semi-closed loop function

The position control diagram of the DA180A series servo drive is shown in the figure below. The gain parameters that can be adjusted in the position mode are marked out in the diagram.

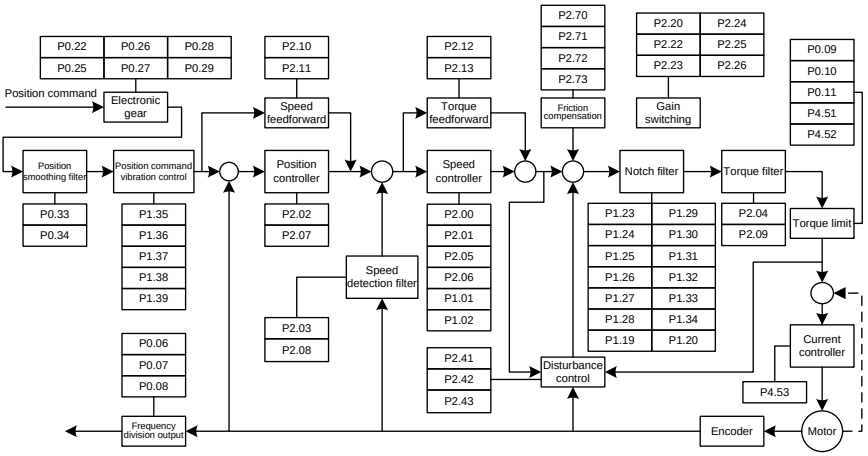

- Fully-closed loop function

The fully-closed loop control diagram of the DA180A series servo drive is shown in the figure below. The gain parameters that can be adjusted are marked out in the diagram.

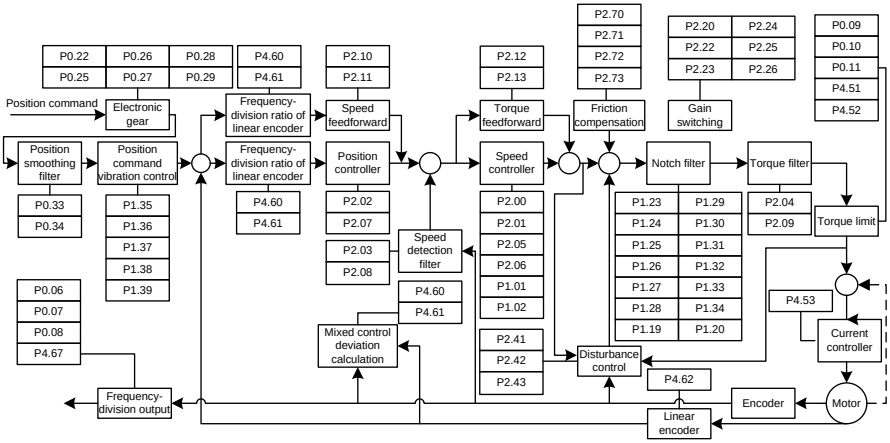

The common procedures for adjusting parameters in position mode are as follows:

Step 1 Initial setting of the parameters

The defaults of the parameters can be recovered by the default parameter recovering operation (see section 5.2.5.3 for details).

Step 2 Adjust the position loop gain

If the servo motor runs with default settings but the system vibrates with buzzes, decrease the position loop gain (that is, P2.02 or P2.07) or increase it when the system rigidity is low.

Step 3 Adjust the position smoothing filter

In position control, if the input frequency changes of position pulse commands are noticeable, huge surges may be caused. You need to adjust the P0.33 [Position command smooth filter time] or P0.34 [Position command FIR filter time].

Step 4 Adjust the electronic gear

If the pulse generation device is limited on the pulse sending frequency or the sending frequency does not meet mechanical requirements, you can change the pulse input frequency by adjusting P0.22 [Pulses per motor resolution] or electronic gear ratio parameters P0.25, P0.26, P0.27, P0.28, and P0.29, so as to meet position control requirements.

Step 5 Adjust the position feed-forward

If the residual pulses are great or no-deviation tracking is required, you can adjust the speed feed-forward gain parameter P2.10 and speed feed-forward filtering parameter P2.11 to improve

position tracking performance. However, if the speed feed-forward gain is too large, the system may vibrate.

Step 6 Set the frequency division for feedback pulse output

If feedback pulses need to be output, you can set the frequency-division output coefficient parameters P0.06 and P0.07 to change the pulse output frequency.

7.2.2 Gain adjustment of speed mode

The speed control diagram of the DA180A series servo drive is shown in the figure below. The gain parameters that can be adjusted in the speed mode are marked out in the diagram.

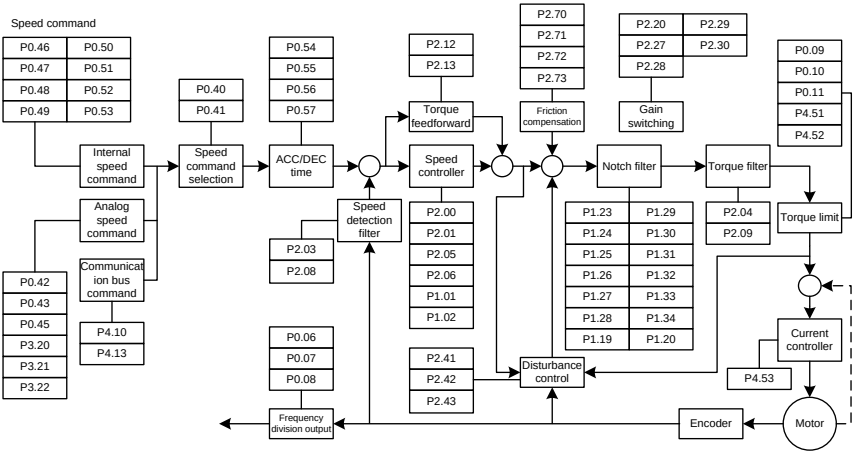

The common procedures for adjusting parameters in speed mode are as follows:

Step 1 Restore default settings

For details, see section 5.2.5.3 "Factory parameter restoring".

Step 2 Adjust the speed loop gain

If the servo motor runs with default settings but the system vibrates with buzzes, you need to decrease the speed loop gain (that is, P2.00 or P2.05) or increase it when the system rigidity is low or the speed fluctuates sharply.

Step 3 Adjust the speed integral time constant

If the speed loop gain is increased, you need to increase the speed integral time constant (that is, P2.01 or P2.06) as well. Conversely, if the speed loop gain is decreased, you need to decrease the speed integral time constant as well.

Step 4 Adjust the ACC/DEC time

If the speed in the starting process changes sharply, huge surges or overcurrent may be caused. You need to adjust P0.54 [ACC time] to smooth the ramp-up. Similarly, you can adjust P0.55 [DEC time] to smooth the ramp-down for the stop.

Step 5 Adjust the S-curve ACC/DEC time

If the speed change cannot be smoothed by adjusting the ACC or DEC time, you can adjust P0.56 [S-curve ACC time] or P0.57 [S-curve DEC time].

Step 6 Adjust the speed smoothing filter

If the analog input is a speed command, you can adjust the analog input filter to smooth the speed change.

Step 7 Adjust the torque feed-forward

If the speed tracking performance is not improved after the parameter adjusting, you can adjust P2.12 [Torque feed-forward gain] and P2.13 [Torque feed-forward filter time] to improve it. However, if the torque feed-forward gain is too high, the system may become unstable.

Step 8 Adjust the speed filter

You can improve speed loop performance by adjusting the torque filter parameters P2.04 and P2.09 and speed detection filter parameters P2.03 and P2.08.

Step 9 Adjust notch filtering

For details, see section 7.3 "Mechanical resonance suppressing".

Step 10 Set the frequency division for feedback pulse output

If the encoder feedback pulse signal needs to be output, you can set the frequency-division output coefficient parameters P0.06 and P0.07 to change the pulse output frequency.

Step 11 Adjust disturbance suppression

If the load change is noticeable or sudden external disturbance on the torque occurred when the gain settings are small, you can adjust P2.42 [Disturbance observer compensation gain] and P2.43 [Disturbance observer cut-off frequency]to reduce the impact by external disturbance, so as to improve speed loop performance.

Step 12 Adjust friction compensation

If the speed follow-up performance is poor in the process of the motor changing the direction for forward or reverse rotating, you can adjust P2.71 [CCW torque coefficient of friction compensation] and P2.72 [CW torque coefficient of friction compensation] to improve speed loop performance in the process.

7.2.3 Gain adjustment of torque mode

The torque control diagram of the DA180A series servo drive is shown in the figure below. The gain parameters that can be adjusted in the torque mode are marked out in the diagram.

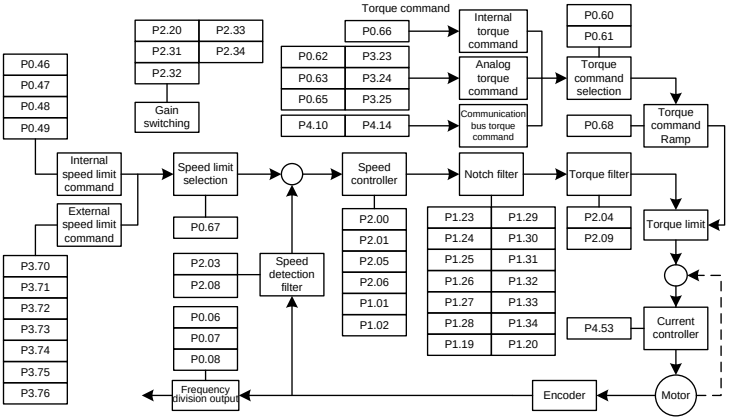

The common procedures for adjusting parameters in torque mode are as follows:

Step 1 Restore default settings

For details, see section 5.2.5.3 "Factory parameter restoring".

Step 2 Adjust the torque smoothing filter

If the analog input is a torque command, you can adjust the analog input filter to smooth the torque change.

Step 3 Set the frequency division for feedback pulse output

If the encoder feedback pulse signal needs to be output, you can set the frequency-division output coefficient parameters P0.06 and P0.07 to change the pulse output frequency.

7.3 Mechanical resonance suppressing

The mechanical system has a certain resonant frequency. If a high servo response speed is set when the mechanical rigidity is low, the shaft torsion may cause resonance (including vibration and abnormal noise) near the mechanical resonant frequency. The resonance of the mechanical system can be effectively suppressed by setting the parameters of the notch filters.

The notch filters achieve the goal of suppressing mechanical resonance by decreasing the gain of certain frequency. You can set notch filter parameters to suppress the resonant frequency, width, and depth, so as for the system to obtain higher gains or reduce vibration.

This servo drive is equipped with four notch filters which can be set by 1st notch filter parameter (P1.23, P1.24, P1.25), 2nd notch filter parameter (P1.26, P1.27, P1.28), 3rd notch filter parameter (P1.29, P1.30, P1.31) and 4th notch filter parameter (P1.32, P1.33, P1.34). 1st and 2nd notch filter parameters need to be set manually; 3rd and 4th notch filter parameters can be set by online self-adaption. The position of notch filter in speed loop is shown in the figure in chapter 7.2.2. The setup of notch filter is shown in the diagram below.

Note: The notch filters are a lagging factor for the servo system. If the center frequency of a notch filter is incorrectly set or the suppression depth is too large, the vibration may be stronger. It is recommended to gradually increase the depth (the parameter setting changes from large to small) until requirements are met.

The relationship between the Q value, width, and depth of a notch filter is as follows:

- Q value of the notch filter = Center frequency of the notch wave/Width of the notch wave.
- The width of the notch filter indicates the frequency difference between the -3dB–dropped power spectrums at the two sides of the center frequency when the depth of the notch filter is 0.
- The depth of the notch filter indicates the ratio of input to output. The power spectrum strength is attenuated by 20log (P1.25%, P1.28%, P1.31%, P1.34%) dB.

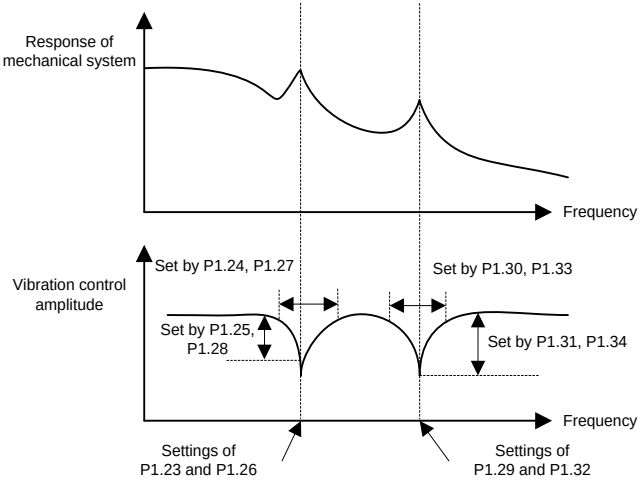

7.4 Gain switching function

Gain switching operation is performed through internal data or external signal:

1. Control motor vibration if the gain is reduced during stop.
2. Shorten tuning and positioning time if the gain is increased during stop.
3. Improve command follow-up and speed if the gain is increased during working.
4. Control gain switching through external signals based on external state of device.

- Position control and fully-closed loop control (●: valid, —: invalid)

Condition setting of gain switching			Parameters setting of position control and fully-closed loop control mode		
P2.22	Switch to 2nd gain	Figure	Delay time*1	Level	Lag*2
			P2.23	P2.24	P2.25
0	1nd gain fixed		-	-	-
1	2nd gain fixed		-	-	-
2	Switching input with gain		-	-	-
3	Large torque command	1	●	●(0.1%)	●(0.1%)
4	Large speed command	3	●	●(r/min)	●(r/min)
5	Large position deviation	4	●	●*3(reference unit)	●*3(reference unit)
6	With position command	5	●	-	-
7	Positioning not finished	6	●	-	-
8	Large actual speed	3	●	●(r/min)	●(r/min)
9	With position command+actual speed	7	●	●(r/min)*5	●(r/min)*5

- Speed control mode

Condition setting of gain switching			Parameters setting of speed control mode		
P2.27	Switch to 2nd gain	Figure	Delay time*1	Level	Lag*2
			P2.28	P2.29	P2.30
0	1nd gain fixed		-	-	-
1	2nd gain fixed		-	-	-
2	Switching input with gain		-	-	-
3	Torque command	1	●	●(0.1%)	●(0.1%)
4	Speed command variable	2	-	●*4(10(r/min)/s)	●*4(10(r/min)/s)
5	Speed command	3	●	●(r/min)	●(r/min)

- Torque control mode

Condition setting of gain switching			Parameters setting of torque control mode		
P2.31	Switch to 2nd gain	Figure	Delay time*1	Level	Lag*2
			P2.32	P2.33	P2.34
0	1nd gain fixed		-	-	-
1	2nd gain fixed		-	-	-
2	Switching input with gain		-	-	-
3	Torque command	1	●	●(0.1%)	●(0.1%)

Note:

*1 Delay time (P2.23, P2.28, P2.32) is only valid when 2nd gain to 1st gain.

*2 The definition of lag (P2.25, P2.30, P2.34) is shown as the figure below.

*3 The encoder and external linear encoder can be designated in the control mode.

*4 If 10r/min speed changing in 1s, the setting value is 1.

*5 If P2.22=9, the delay time, level and lag have different meaning (see figure 7).

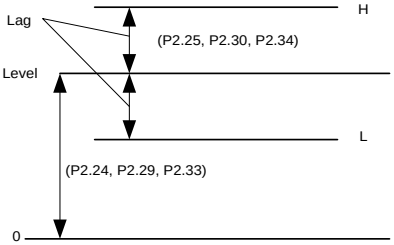

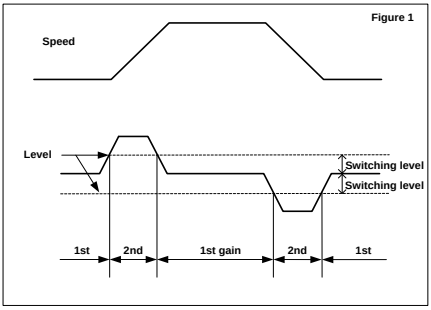

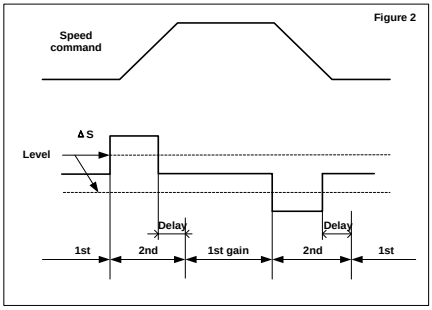

Figure 3

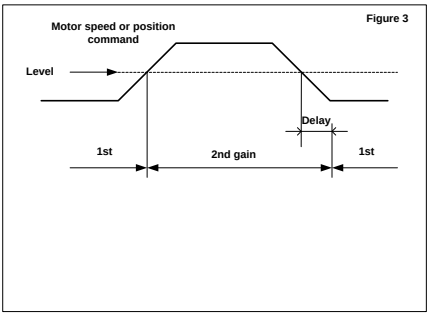

Figure 4

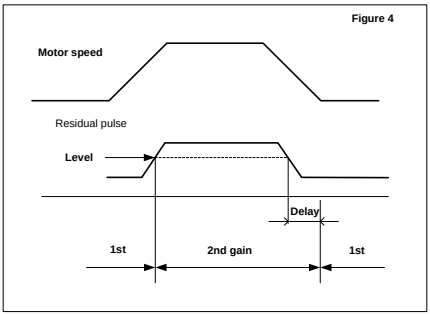

Figure 5

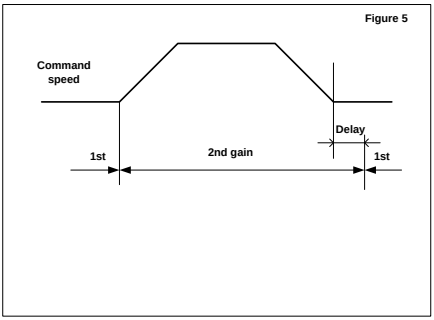

Figure 6

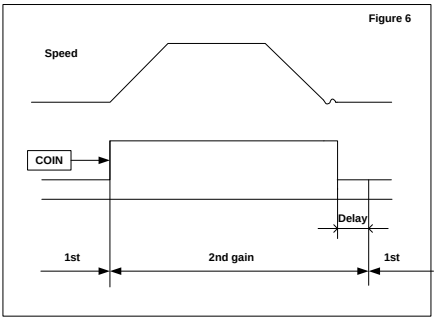

Figure 7

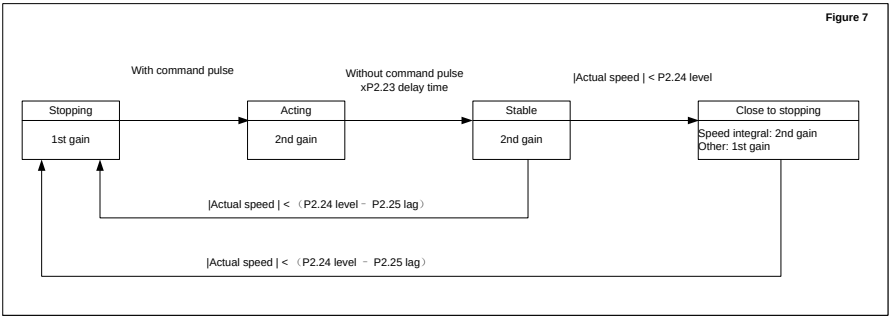

Note: The offset of gain switching sequence caused by lag (P2.25, P2.30, P2.34) is not reflected in above graphs.

8 Communication

8.1 Overview

DA180 servo drive provides RS485 and CANopen interfaces to communicate with the upper computer NC or PLC. The NC or PLC can implement asynchronous serial half-duplex communication with 31 servo drives simultaneously through the RS485 interface or with 127 servo drives simultaneously through the CAN interface to:

- Read/write the function parameters of the servo drives
- Monitor the operating state of the servo drives
- Form a multi-axis control system

The servo drive provides the USB and CANopen interfaces to communicate with the PC. Thus, the PC uses either of the interfaces to calibrate the parameter settings, monitor state, and read data from and write data to the servo drive.

8.2 RS485 communication protocol

DA180 servo drive provides the RS485 communication interface, which uses the standard Modbus communication protocol to implement master/slave communication. You can implement integrated control on the PC, PLC, or upper computer to meet specific application requirements. Integrated control includes setting servo drive control commands, running frequency, function codes, and working state, and monitoring fault information.

8.2.1 Modbus protocol description

The Modbus serial communication protocol defines the frame content and format for asynchronous transmission in serial communication. This includes the format of master polling and broadcast frames, and slave response frames. The frame content organized by the master includes: slave address (or broadcast address), execution command, data, and error verification. The response from a slave also adopts the same structure, including action confirmation, returned data, and error verification. If the slave encounters an error when receiving a frame or it cannot complete the action requested by the master, it will organize a fault frame as a response feedback to the master.

8.2.2 Protocol application

DA180 servo drive uses the asynchronous serial master/slave Modbus communication protocol, which indicates only one device (that is, the master) in the network can establish protocols (called "queries/commands"). The other devices (that is, the slave) can only provide data response to or react according to the "queries/commands" from the master. The master herein indicates the PC, industrial control device, or PLC, while the slave indicates DA180 servo drive or other control devices with the same communication protocol. The master can communicate with any single slave or

broadcast with all slaves. For a separate access "query/command" from the master, a slave needs to return a response. For broadcast information, a slave does not need to return a response.

8.2.3 Communication frame structure

Modbus supports the RTU transmission mode only. You can set the serial communication parameters (including the baud rate and check method).

In an RTU message frame, each 8-bit byte consists of two 4-bit hexadecimal characters.

Table 8-1 RTU message frame

Start bit	Device address	Command	Data	CRC	Stop bit
T1-T2-T3-T4	8Bit	8Bit	n * 8 bits	16Bit	T1-T2-T3-T4

In this mode, each message must be preceded by a time gap with a minimum length of 3.5 characters. During the transmission, the network device continuously detects the network bus even within the time gap. When the first domain (or address domain) is received, the corresponding device decodes the subsequent transmission characters. The message ends only when there is a time gap with a minimum length of 3.5 characters.

An entire RTU message frame must be transmitted as a continuous flow. If a receiver detects a time gap with a minimum length of 1.5 characters before the frame ends, the receiver refreshes the incomplete message and assumes that the next byte is the address domain of a new message. Similarly, if a new message follows the previous message within the time gap with a length of less than 3.5 characters, the receivers considers the new message as the continuity to the previous message. If either of the case occurs, a CRC error message is generated and sent back to the sender.

8.2. 4 Command code and communication data description

8.2.4.1 Command code: 03H

Function: read N words (can read no more than 16 words continuously).

For example, the servo drive with the salve address of 01H, if its starting address is 03F2H, read 2 words continuously, and then the structure of the frame is:

Table 8-2 Master command message

START	T1-T2-T3-T4 (transmission time of 3.5 bytes)
ADDR	01H
CMD	03H
Read MSB in start address	03H
Read LSB in start address	F2H
MSB of data count (in word)	00H
LSB of data count (in word)	02H
CRC CHK LSB	65H

CRC CHK MSB	BCH
END	T1-T2-T3-T4 (transmission time of 3.5 bytes)

Table 8-3 Slave response message

START	T1-T2-T3-T4 (transmission time of 3.5 bytes)
ADDR	01H
CMD	03H
Number of bytes	04H
Content MSB of start address 03F2H	00H
Content LSB of start address 03F2H	C8H
Content MSB of 2nd address 03F3H	00H
Content LSB of 2nd address 03F3H	00H
CRC CHK LSB	7BH
CRC CHK MSB	CDH
END	T1-T2-T3-T4 (transmission time of 3.5 bytes)

8.2.4.2 Command code: 10H

Function: write N words (N≥2)

For example, write 300 (0000012CH) into address 03F2H of the servo drive with the slave address 01H, the command frame structure is as follows:

Table 8-4 Master command message

START	T1-T2-T3-T4 (transmission time of 3.5 bytes)
ADDR	01H
CMD	10H
MSB of data writing address	03H
LSB of data writing address	F2H
MSB of data count (in word)	00H
LSB of data count (in word)	02H
Number of bytes	04H
MSB of 1st word in data content	01H
LSB of 1st word in data content	2CH
MSB of 2nd word in data content	00H
LSB of 2nd word in data content	00H
CRC CHK LSB	A9H
CRC CHK MSB	F7H
END	T1-T2-T3-T4 (transmission time of 3.5 bytes)

Table 8-5 Slave response message

START	T1-T2-T3-T4 (transmission time of 3.5 bytes)
ADDR	01H
CMD	10H
Write MSB of data start address	03H
Write LSB of data start address	F2H
MSB of data count (in word)	00H
LSB of data count (in word)	02H
CRC CHK LSB	E0H
CRC CHK MSB	7FH
END	T1-T2-T3-T4 (transmission time of 3.5 bytes)

8.2.5 Error checkout of the communication frame

The error check of a frame includes two parts, namely, bit check on individual bytes (that is, odd/even check using the check bit in the character frame), and entire data check (CRC or LRC).

8.2.5.1 Bit check on individual bytes

You can select the bit check mode as required, or you can choose not to perform the check, which will affect the check bit setting of each byte.

Definition of even check: Before the data is transmitted, an even check bit is added to indicate whether the number of "1" in the to-be-transmitted data is odd or even. If it is even, the check bit is set to "0, and if it is odd, the check bit is set to "1".

Definition of odd check: Before the data is transmitted, an odd check bit is added to indicate whether the number of "1" in the to-be-transmitted data is odd or even. If it is odd, the check bit is set to "0", and if it is even, the check bit is set to "1".

For example, the data bits to be sent are "11001110", including five "1". If the even check is applied, the even check bit is set to "1"; and if the odd check is applied, the odd check bit is set to "0". During the transmission of the data, the odd/even check bit is calculated and placed in the check bit of the frame. The receiving device performs the odd/even check after receiving the data. If it finds that the odd/even parity of the data is inconsistent with the preset information, it determines that a communication error occurs.

8.2.5.2 Cyclic redundancy check (CRC)

A frame in the RTU format includes an error detection domain based on the CRC calculation. The CRC domain checks all the content of the frame. The CRC domain consists of two bytes, including 16 binary bits. It is calculated by the transmitter and added to the frame. The receiver calculates the CRC of the received frame, and compares the result with the value in the received CRC domain. If the two CRC values are not equal to each other, errors occur in the transmission.

During CRC, 0xFFFF is stored first, and then a process is invoked to process a minimum of 6 contiguous bytes in the frame based on the content in the current register. CRC is valid only for the 8-bit data in each character. It is invalid for the start, stop, and check bits.

During the generation of the CRC values, the "exclusive or" (XOR) operation is performed on the each 8-bit character and the content in the register. The result is placed in the bits from the least significant bit (LSB) to the most significant bit (MSB), and 0 is placed in the MSB. Then, LSB is detected. If LSB is 1, the XOR operation is performed on the current value in the register and the preset value. If LSB is 0, no operation is performed. This process is repeated 8 times. After the last bit (8th bit) is detected and processed, the XOR operation is performed on the next 8-bit byte and the current content in the register. The final values in the register are the CRC values obtained after operations are performed on all the bytes in the frame.

The calculation adopts the international standard CRC check rule. You can refer to the related standard CRC algorithm to compile the CRC calculation program as required.

8.2.6 Error message response

When returning a response, the slave uses a function code domain and fault address to indicate whether it is a normal response (no error) or exception response (an error occurs). In a normal response, the slave returns the corresponding function code and data address or sub-function code. In an exception response, the slave returns a code that is equal to a normal code, but the first bit is logic 1.

For example, if the master sends a request message to a slave for reading a group of function code address data, the following code is generated:

0 0 0 0 0 0 1 1 (03H in the hexadecimal form)

In a normal response, the slave returns the same function code. In an exception response, the slave returns the following code:

1 0 0 0 0 0 1 1 (83H in the hexadecimal form)

In addition to the modification of the code, the slave returns a byte of exception code that describes the cause of the exception.

After receiving the exception response, the typical processing of the master is to send the request message again or modify the command based on the fault information.

Table 8-6 Error code definition

Modbus exception codes		
Code	**Name**	**Meaning**
01H	Invalid function	The function code received by the upper computer is not allowed to be executed. The possible causes are as follows:

Modbus exception codes		
Code	**Name**	**Meaning**
		• The function code is applicable only on new devices and is not implemented on this device. • The slave is in faulty state when processing this request.
02H	Invalid data address	For the drive, the data address in the request of the host controller is not allowed. In particular, the combination of the register address and the number of the to-be-sent bytes is invalid.
03H	Invalid data value	The data value received is beyond the range of address parameters, leading the parameter modification invalid.
11H	Check error	In the frame message sent by the upper computer, if the CRC check bit of RTU format or the LRC check bit of ASCII format is different from the check number calculated by the lower devise, check error will be reported.

8.3 CANopen communication protocol

8.3.1 CANopen protocol description

CANopen is a high-layer communication protocol structured over the Control Area Network (CAN). It includes the communication profiles and device profiles for embedded systems. It is also an onsite bus widely used in industrial control. Common CANopen devices and communication profiles are defined in CAN in Automation (CiA) draft standard 301. Based on CiA 301, other profiles are developed for special devices, such as CiA 402 for motion control.

8.3.2 CANopen hardware configuration

For details on the pin definitions and functions of the CAN communication terminal CN3, see 3.6 Encoder-CN2 terminal wiring. The following table lists the mapping between baud rates and maximum transmission lengths.

Communication baud rate	Communication length
1Mbit/s	25m
500kbit/s (default)	100m
250kbit/s	250m
125kbit/s	500m
50kbit/s	1000m
20kbit/s	2500m

Note:

- The CANL and CANH pins of all slaves can be directly connected in serial model, but not star model.
- A 120 ohms resistor must be connected between the master and final node of the slave.

- Shielded twisted pairs are recommended as CAN connection cables for anti-interference.
- A longer connection cable indicates a higher requirement on CAN chip drive ability.

8.3.3 CANopen software configuration

Configure following three parameters before the application of CANopen:

1. Set P0.03 through LED panel or ServoPlorer software to 7 [CANopen mode];
2. Set P4.02 through LED panel or ServoPlorer software (0:1Mbps; 1:500kbps; 2:250kbps; 3:125kbps;4:50kbps; 5:20kbps);
3. Set P4.05 through LED panel or ServoPlorer software (range:1–127).

Note:

- Above three parameters are valid after restarting, so it is necessary to repower again or reset the drive.
- The node number of the salve cannot be the same as the node number of the master and other slaves (CNC or PLC).
- Synchronous signal is generated by the master or be configured by the slave. The unit of synchronous communication cycle is 1us and the minimum unit of DA180A is 1000 μs (1ms).
- 0x1017 parameters is needed to be configured when the master needs the slave to send a heartbeat message. The unit is 1ms.
- The drive will shut down automatically to ensure safety when CANopen state machine exits from OP state.

8.3.4 CANopen functions

As a standard slave of CANopen, DA180 servo drive supports some parameters of 301 standard protocol and 402 dynamic control protocol.

The basic CANopen protocols supported include NMT, SYNC, SDO, PDO, and EMCY.

The predefined connection set defines four Receive-PDOs, four Transmit-PDOs, one SDO (occupying two CAN-IDs), one emergency object, and one Node-Error-Control ID. The servo drive also supports the NMT-Module-Control service that needs no confirmation and broadcast of SYNC objects.

Table 8-7 CiA 402 protocol parameters supported by the servo drive

Index	Object Type	Name	Data Type	Access	Mappable
6040_h	VAR	Control word	UNSIGNED16	RW	Y
6041_h	VAR	Status word	UNSIGNED16	RO	Y
6042_h	VAR	vl target velocity	INTEGER16	RW	Y
6043_h	VAR	vl velocity demand	INTEGER16	RO	Y
6044_h	VAR	vl control effort	INTEGER16	RO	Y
6046_h	ARRAY	vl velocity min max amount	UNSIGNED32	RW	Y

Index	Object Type	Name	Data Type	Access	Mappable
6047_h	ARRAY	vl velocity min max	UNSIGNED32	RW	Y
6048_h	RECORD	vl velocity acceleration	UNSIGNED32	RW	Y
6049_h	RECORD	vl velocity deceleration	UNSIGNED32	RW	Y
6060_h	VAR	Mode of operation	INTEGER8	RW	Y
6061_h	VAR	Mode of operation display	INTEGER8	RO	Y
6062_h	VAR	Position demand value	INTEGER32	RO	Y
6063_h	VAR	Position actual value*	INTEGER32	RO	Y
6064_h	VAR	Position actual value	INTEGER32	RO	Y
6065_h	VAR	Following error window	UNSIGNED32	RW	Y
6066_h	VAR	Following error time out	UNSIGNED16	RW	Y
6067_h	VAR	Position window	UNSIGNED32	RW	Y
6069_h	VAR	Velocity sensor actual value	INTEGER32	RO	Y
$606B_h$	VAR	Velocity demand value	INTEGER32	RO	Y
$606C_h$	VAR	Velocity actual value	INTEGER32	RO	Y
$606D_h$	VAR	Velocity window	UNSIGNED16	RW	Y
$606F_h$	VAR	Velocity threshold	UNSIGNED16	RW	Y
6071_h	VAR	Target torque	INTEGER16	RW	Y
6072_h	VAR	Max torque	UNSIGNED16	RW	Y
6073_h	VAR	Max current	UNSIGNED16	RO	Y
6074_h	VAR	Torque demand value	INTEGER16	RO	Y
6075_h	VAR	Motor rated current	UNSIGNED32	RO	Y
6076_h	VAR	Motor rated torque	UNSIGNED32	RO	Y
6077_h	VAR	Torque actual value	INTEGER16	RO	Y
6078_h	VAR	Current actual value	INTEGER16	RO	Y
6079_h	VAR	DC link circuit voltage	UNSIGNED32	RO	Y
$607A_h$	VAR	Target position	INTEGER32	RW	Y
$607C_h$	VAR	Home offset	INTEGER32	RW	Y
$607D_h$	ARRAY	Software position limit	INTEGER32	RW	Y
6080_h	VAR	Max motor speed	UNSIGNED32	RW	Y
6081_h	VAR	Profile velocity	UNSIGNED32	RW	Y
6083_h	VAR	Profile acceleration	UNSIGNED32	RW	Y
6084_h	VAR	Profile deceleration	UNSIGNED32	RW	Y
6085_h	VAR	Quick stop deceleration	UNSIGNED32	RW	Y
6086_h	VAR	Motion profile type	INTEGER16	RO	Y
6087_h	VAR	Torque slope	UNSIGNED32	RW	Y
6088_h	VAR	Torque profile type	INTEGER16	RO	Y
6093_h	ARRAY	Position factor	UNSIGNED32	RW	Y

Index	Object Type	Name	Data Type	Access	Mappable
6098_h	VAR	Homing method	INTEGER8	RW	Y
6099_h	ARRAY	Homing speeds	UNSIGNED32	RW	Y
$60C0_h$	VAR	Interpolation sub mode select	INTEGER16	RO	Y
$60C1_h$	ARRAY	Interpolation data record	INTEGER32	RW	Y
$60C2_h$	RECORD	Interlopation time period	INTEGER8	RW	Y
$60F4_h$	VAR	Following error actual value	INTEGER32	RO	Y
$60F8_h$	VAR	Max slippage	INTEGER32	RW	Y
$60FA_h$	VAR	Control effort	INTEGER32	RO	Y
$60FC_h$	VAR	Position demand value*	INTEGER32	RO	Y
$60FD_h$	VAR	Digital inputs	UNSIGNED32	RO	Y
$60FE_h$	ARRAY	Digital outputs	UNSIGNED32	RO	Y
$60FF_h$	VAR	Target velocity	INTEGER32	RW	Y

Table 8-8 CANopen fault codes

Display	Fault name	32-bit fault code (16-bit error code + 16-bit additional information)
Er01-0	IGBT fault	FF01-0100h
Er01-1	Braking pipe fault (7.5kW and above models)	FF01-0101h
Er02-0	Encoder fault–Encoder disconnection	7300-0200h
Er02-1	Encoder fault–Encoder feedback deviation too large	7300-0201h
Er02-2	Encoder fault– Parity error	7300-0202h
Er02-3	Encoder fault–CRC error	7300-0203h
Er02-4	Encoder fault–Frame error	7300-0204h
Er02-5	Encoder fault–Short frame error	7300-0205h
Er02-6	Encoder fault–Encoder timeout	7300-0206h
Er02-7	Encoder fault–FPGA timeout	7300-0207h
Er02-8	Encoder fault–Encoder battery low-voltage alarm	7300-0208h
Er02-9	Encoder fault–Encoder battery undervoltage fault	7300-0209h
Er02-a	Encoder fault–Encoder overheating	7300-020Ah
Er02-b	Encoder fault–Encoder EEPROM writing error	7300-020Bh
Er02-c	Encoder fault–No data in encoder EEPROM	7300-020Ch
Er02-d	Encoder fault–Encoder EEPROM data check error	7300-020Dh
Er03-0	Current sensor fault–Phase-U current sensor fault	7300-0300h

Display	Fault name	32-bit fault code (16-bit error code + 16-bit additional information)
Er03-1	Current sensor fault–Phase-V current sensor fault	7300-0301h
Er03-2	Current sensor fault–Phase-W current sensor fault	7300-0302h
Er04-0	System initialization fault	FF01-0400h
Er05-1	Setting fault–Motor model not exist	FF01-0501h
Er05-2	Setting fault–Motor and drive model not match	FF01-0502h
Er05-3	Setting fault–Incorrect software limits	FF01-0503h
Er05-4	Setting fault–Incorrect homing mode	FF01-0504h
Er05-5	Setting fault–PTP-control travel overflow	FF01-0505h
Er07-0	Regenerative discharge overload fault	7100-0700h
Er08-0	AI overvoltage fault–AI 1	5441-0800h
Er08-1	AI overvoltage fault–AI 2	5442-0801h
Er08-2	AI overvoltage fault–AI 3	5443-0802h
Er09-0	EEPROM fault–Read/write error	5530-0900h
Er09-1	EEPROM fault–Data check error	5530-0901h
Er10-0	Hardware fault–FPGA fault	5544-0A00h
Er10-1	Hardware fault–Communication card fault	5544-0-A01h
Er10-2	Hardware fault–To-ground short circuit fault	5544-0-A02h
Er10-3	Hardware fault–External input fault	5544-0-A03h
Er10-4	Hardware fault–Emergency stop fault	4458-0-A04h
Er10-5	Hardware fault–485 communication fault	4458-0-A05h
Er11-0	Software fault–Motor control task re-entry	6100-0-B00h
Er11-1	Software fault–Periodic task re-entry	6100-0-B01h
Er11-2	Software fault–Illegal operation	6100-0-B02h
Er12-0	I/O fault–Duplicate DI assignment	FF01-0C00h
Er12-1	I/O fault–Duplicate AI assignment	FF01-0C01h
Er12-2	I/O fault–Pulse input frequency too high	FF01-0C02h
Er13-0	Main circuit overvoltage fault	3110-0-D00h
Er13-1	Main circuit undervoltage fault	3120-0-D01h
Er14-0	Control power undervoltage fault	5200-0-E00h
Er17-0	Drive overload fault	FF01-1100h
Er18-0	Motor overload fault	2310-1200h
Er18-1	Motor overtemperature fault	2310-1201h
Er19-0	Speed fault–Overspeed fault	7180-1300h
Er19-1	Speed fault–FWD overspeed fault	7180-1301h

Display	Fault name	32-bit fault code (16-bit error code + 16-bit additional information)
Er19-2	Speed fault–REV overspeed fault	7180-1302h
Er19-3	Speed fault–Incorrect overspeed parameter setting	7180-1303h
Er20-0	Speed out-of-tolerance fault	8400-1400h
Er21-0	Position overtravel - FWD overtravel	FF01-1500h
Er21-1	Position overtravel - REV overtravel	FF01-1501h
Er22-0	Position out-of-tolerance fault	8500-1600h
Er22-1	Hybrid control deviation too large	FF01-1601h
Er22-2	Position increment overflow fault	FF01-1602h
Er22-3	CANopen fault–Synchronization signal timeout	FF01-1603h
Er22-4	CANopen fault–Full position command buffer	FF01-1604h
Er23-0	Drive overtemperature fault	4210-1700h
Er25-4	Application fault–Encoder offset angle test timeout	FF01-1904h
Er25-5	Application fault–Encoder offset angle test failed	FF01-1905h
Er25-6	Application fault–Homing offside	FF01-1906h
Er25-7	Application fault–Inertia identifying failed	FF01-1907h
Er26-0	CANopen fault–CANopen disconnection	FF01-1A00h
Er26-1	CANopen fault–SDO index does not exist	FF01-1A01h
Er26-2	CANopen fault–SDO sub index does not exist	FF01-1A02h
Er26-3	CANopen fault–SDO data length error	FF01-1A03h
Er26-4	CANopen fault–SDO write data beyond the range	FF01-1A04h
Er26-5	CANopen fault–Read-only and non-modifiable	FF01-1A05h
Er26-6	CANopen fault–PDO mapping length error	FF01-1A06h
Er26-7	CANopen fault–PDO mapping data does not exist	FF01-1A07h
Er26-8	CANopen fault–PDO is not allowed to be changed during operating	FF01-1A08h
Er26-9	CANopen fault–PDO mapping is not allowed	FF01-1A09h
Er26-a	CANopen fault–Sync signal is too fast	FF01-1A0Ah
Er26-b	CANopen fault–Receiving fault	FF01-1A0Bh
Er26-c	CANopen fault–Sending fault	FF01-1A0Ch
Er26-d	CANopen fault–Sync signal repeat	FF01-1A0Dh

Display	Fault name	32-bit fault code (16-bit error code + 16-bit additional information)
Er26-e	CANopen fault–Bus load ratio too high	FF01-1A0Eh
Er26-f	CANopen fault–Incorrect parameter modification state	FF01-1A0Fh

9 Faults and solutions

9.1 Drive faults and solutions

Fault code	Name	Possible cause	Solution
Er01-0	IGBT fault	The drive actual output current exceeds the specified value. 1. Drive fault (such as drive circuit or IGBT fault). 2. Motor cables U, V, and W are short connected, or motor cables are grounded or contacted improperly. 3. The motor breaks down. 4. The motor cables U, V, and W are connected in reverse phases. 5. Improper parameter settings cause systematic divergence. 6. The ACC/DEC time in the start or stop process is too short. 7. Instantaneous load is too heavy.	1. Remove the motor cables and then enable the drive. If the fault persists, replace the drive. 2. Ensure the motor cables and wiring are in good conditions. 3. Reduce the settings of P0.10 and P0.11 to reduce the maximum output torque. 4. Increase the ACC/DEC time. 5. Replace the drive with a new one with greater power. 6. Replace the motor.
Er01-1	Braking pipe fault (7.5kW and higher models)	Braking unit fault.	Replace the drive.
Er01-2	U-phase IGBT fault	U-phase IGBT is damaged or external short circuit causes overcurrent.	1. Check whether the motor cables U, V, and W are short-circuited. 2. Remove the motor cables U, V, and W and then enable the drive. If the fault persists, replace the drive.
Er01-3	V-phase IGBT fault	V-phase IGBT is damaged or external short circuit causes overcurrent.	
Er01-4	W-phase IGBT fault	W-phase IGBT is damaged or external short circuit causes	

Fault code	Name	Possible cause	Solution
		overcurrent.	
Er01-5	IPM fault	1. The drive actual output current exceeds the specified value. 2. Drive fault (such as drive circuit or IGBT fault). 3. Motor cables U, V, and W are short connected, or motor cables are grounded or contacted improperly. 4. The motor breaks down. 5. The motor cables U, V, and W are connected in reverse phases. 6. Improper parameter settings cause systematic divergence. 7. The ACC/DEC time in the start or stop process is too short. 8. Instantaneous load is too heavy.	1. Remove the motor cables and then enable the drive. If the fault persists, replace the drive. 2. Ensure the motor cables and wiring are in good conditions. 3. Reduce the settings of P0.10 and P0.11 to reduce the maximum output torque. 4. Increase the ACC/DEC time. 5. Replace the drive with a new one with greater power. 6. Replace the motor.
Er02-0	Encoder fault–Encoder disconnection	1. The encoder is not connected. 2. The encoder plug contact is loose. 3. One of encoder signal cables U, V, W, A, B, and Z is disconnected. 4. Encoder phases A and B are reverse. 5. Noise causes communication	1. Connect the encoder according to the correct wiring method. Ensure the encoder plug contact is proper. Replace the encoder cable if the cable is broken. 2. Ensure the encoder power voltage is proper. 3. Eliminate the conditions that disturb encoder cables. Route encoder cables and
Er02-1	Encoder fault–Encoder feedback deviation too large		
Er02-2	Encoder fault– Parity error		
Er02-3	Encoder fault–CRC error		

Fault code	Name	Possible cause	Solution
Er02-4	Encoder fault–Frame error	interruption or data exceptions. 6. The encoder communicates properly but with data exceptions. 7. The FPGA that communicates with the encoder reports timeout. 8. The drive does not support the encoder type.	motor cables separately. Connect the shielded cables for the encoder to the FG. 4. If an encoder disconnection fault is reported during power-on, check the setting of P0.01 and then ensure the encoder type supported by the drive is the same as the actual encoder type.
Er02-5	Encoder fault–Short frame error		
Er02-6	Encoder fault–Encoder timeout		
Er02-7	Encoder fault–FPGA timeout		
Er02-8	Encoder fault–Encoder battery low-voltage alarm	When a multi-turn absolute encoder is used, the external battery voltage of the encoder is between 3.0V–3.2V.	1. Ensure the encoder battery cable is connected properly. 2. Use the multimeter to check whether the external battery voltage is lower than 3.2V. If yes, replace the battery. 3. Replace the battery when the drive power is on. Otherwise, encoder data will be lost.
Er02-9	Encoder fault–Encoder battery undervoltage fault	When a multi-turn absolute encoder is used, the external battery voltage of the encoder is between 2.5V–3.2V.	1. Ensure the encoder battery cable is connected properly. 2. Use the multimeter to check whether the external battery voltage is lower than 3.0V. If yes, replace the battery. 3. Replace the battery when the drive power is on. Otherwise, encoder data will be lost.
Er02-a	Encoder fault–Encoder overheating	The encoder feedback temperature is higher than the temperature threshold for protection against overheating.	1. Ensure the temperature threshold for protection against overheating is correct. 2. Stop the motor to lower the

Fault code	Name	Possible cause	Solution
			encoder temperature.
Er02-b	Encoder fault–Encoder EEPROM writing error	If the motor is used with a communication encoder, a communication transmission or data check error occurs when the drive updates data to the encoder EEPROM.	1. Ensure encoder cables are connected properly and eliminate the conditions that disturb encoder communication. 2. Make multiple writing attempts. If the fault is reported repeatedly, replace the motor.
Er02-c	Encoder fault–No data in encoder EEPROM	If the motor is used with a communication encoder, no data is found in the encoder EEPROM when the motor attempts to read data from it during power-on.	1. Select the motor model based on the setting of P0.00 and execute the operation of writing data to the encoder EEPROM through P4.97. 2. Mask this fault by setting P4.98. The motor parameters in the drive EEPROM are used for initialization.
Er02-d	Encoder fault–Encoder EEPROM data check error	If the motor is used with a communication encoder, a data check error occurs when the motor attempts to read data from the encoder EEPROM during power-on.	1. Ensure encoder cables are connected properly and eliminate the conditions that disturb encoder communication. 2. Select the motor model based on the setting of P0.00 and execute the operation of writing data to the encoder EEPROM through P4.97 so that data in the encoder EEPROM is updated. 3. Mask this fault by setting

Fault code	Name	Possible cause	Solution
			P4.98. The motor parameters in the drive EEPROM are used for initialization.
Er02-e	Encoder fault–Encoder identification error	FPGA initialization has not been completed.	Perform repower-on, if the fault is reported repeatedly, contact the manufacturer or replace the drive.
Er02-f	Encoder fault–Failed to write the encoder offset angle	The drive failed to write the encoder offset angle to the FPGA.	Contact the manufacturer or replace the drive.
Er03-0	Current sensor fault–Phase-U current sensor fault	1. The current sensor or detection circuit is abnormal. 2. Power-on is made when the motor shaft is in non-static state.	Re-power on when the motor shaft in static state. If the fault is reported repeatedly, replace the drive.
Er03-1	Current sensor fault–Phase-V current sensor fault		
Er03-2	Current sensor fault–Phase-W current sensor fault		
Er04-0	System initialization fault	There are failed self-check items after power-on initialization is complete.	1. Perform repower-on. 2. If the fault occurs repeatedly, replace the drive.
Er05-0	Setting fault–Motor model not exist	P9.50 is set incorrectly.	Ensure the drive model is set correctly and the parameter value is within the allowed range.
Er05-1	Setting fault–Motor model not exist	P0.00 is set incorrectly.	1. Ensure the motor model is set correctly. 2. Ensure the motor parameter model matches the drive power class.
Er05-2	Setting fault–Motor and drive model not match		
Er05-3	Setting fault–Incorrect software limits	Software limits are set incorrectly.	Set P0.35 and P0.36 correctly.

BARGH MOTION

Fault code	Name	Possible cause	Solution
		The setting of P0.35 is equal to or less than that of P0.36.	
Er05-4	Setting fault–Incorrect homing mode	P5.10 is set incorrectly.	Set P5.10 correctly according to the instructions.
Er05-5	Setting fault–PTP-control travel overflow	The single increment of a PTP idle travel exceeds (2^{31} - 1).	Ensure a single travel is not greater than (2^{31} - 1) in absolute position mode.
Er05-6	Setting fault–Power module model not exist	P9.37 is set incorrectly.	Ensure the drive model is set correctly and the parameter value is within the allowed range.
Er07-0	Regenerative brake over-discharge	1. The braking resistor power is low. 2. The motor speed is too high or the deceleration is too quick, which causes the failure to absorb the regenerate energy within specified time. 3. The action limit of the external braking resistor is restricted to the duty ratio 10%.	1. Replace the internal braking resistor with an external one and increase the power. 2. Modify the deceleration time and reduce the regenerative discharge action rate. 3. Reduce the motor speed. 4. Improve the capacity of the motor and drive.
Er08-0	AI overvoltage fault–AI 1	The voltage input to the analog input 1 port exceeds the setting of P3.22.	1. Set P3.22 and P3.25 correctly. 2. Ensure the terminal wiring is proper. 3. Set P3.22 and P3.25 to 0 to disable protection.
Er08-1	AI overvoltage fault–AI 2	The voltage input to the analog input 2 port exceeds the setting of P3.25.	
Er09-0	EEPROM fault–Read/write error	1. Data is damaged in the data storage area when the drive reads data from the EEPROM. 2. Writing data to the EEPROM is disturbed.	1. Try again after re-power on. 2. If the fault occurs repeatedly, replace the drive.

BARGH MOTION

Fault code	Name	Possible cause	Solution
Er09-1	EEPROM fault–Data check error	1. The data read from EEPROM during power-on is different from the data that is written. 2. The drive DSP version is updated.	1. Set all parameters again. 2. If the fault occurs repeatedly, replace the drive.
Er10-0	Hardware fault–FPGA fault	The FPGA on the control board reports a fault.	1. Perform repower-on. 2. If the fault occurs repeatedly, replace the drive.
Er10-1	Hardware fault–Communication card fault	The external communication card is faulty.	1. Perform repower-on. 2. If the fault occurs repeatedly, replace the communication card.
Er10-2	Hardware fault–To-ground short circuit fault	One of the motor cables V and W is short connected to the ground, which is found in to-ground short circuit detection during drive power-on.	1. Ensure motor cables are connected properly. 2. Replace motor cables or check for aging of insulation.
Er10-3	Hardware fault–External input fault	This fault occurs when the digital terminal configured with the external fault input function acts.	1. Clear the external fault input and enable fault clearing. 2. Re-power on the drive.
Er10-4	Hardware fault–Emergency stop fault	This fault occurs when the digital terminal configured with the emergency stop function acts.	1. Cancel the emergency stop input and enable fault clearing. 2. Re-power on the drive.
Er10-5	Hardware fault–485 communication fault	Strong EMI on RS485 communication circuit causes a drive serial communication alarm.	1. Use shielded twisted pairs for RS485 communication. 2. Route communication cables and motor cables separately.
Er10-7	Hardware fault–Fan fault	The fan built in the servo unit stops running.	Check whether there is a foreign material. If the alarm persists after the foreign material is found

Fault code	Name	Possible cause	Solution
			and removed, replace the drive.
Er10-8	Hardware fault–Regenerative transistor fault	The external regenerative brake resistor is connected improperly or disconnected.	1. Check the connections B2 and B3 when the regenerative brake resistor is built in. 2. Ensure the external regenerative brake resistor is connected properly.
Er10-9	Hardware fault–STO phase loss	There is a phase loss in safety terminal input.	Check the safety terminal input wiring.
Er10-a	Hardware fault–STO DPIN1 fault	Safety terminal input 1 is abnormal.	Check the safety terminal input wiring.
Er10-b	Hardware fault–STO DPIN2 fault	Safety terminal input 2 is abnormal.	Check the safety terminal input wiring.
Er11-0	Software fault–Motor control task re-entry	1. The DSP CPU utilization is too high. 2. The DSP has bugs.	1. Disable unnecessary functions. 2. Contact the customer service personnel to update the DSP.
Er11-1	Software fault–Periodic task re-entry		
Er11-2	Software fault–Illegal operation		
Er12-0	I/O fault–Duplicate DI assignment	Two or more digital inputs are configured with the same function.	Set P3.00–P3.09 and ensure each setting is unique.
Er12-1	I/O fault–Duplicate AI assignment	When the drive is a standard model, the function of AI3 is set to speed command.	Set parameter P3.70 (AI3 function) to another value.
Er12-2	I/O fault–Pulse input frequency too high	The pulse input frequency detected by the drive is higher than the specified frequency. 1. External input pulse signal frequency is too high. 2. The internal pulse frequency detection circuit	1. Reduce the external input pulse signal frequency. 2. If the fault persists though the external input signal is normal, replace the drive.

Fault code	Name	Possible cause	Solution
		of the drive is damaged.	
Er13-0	Main circuit overvoltage fault	The detected DC voltage of the drive main circuit is higher than the specified voltage. 1. The grid voltage is too high. 2. Under the braking condition, no braking resistor or pipe is connected, or the braking resistor is damaged. 3. The DEC time in the stop process is too short. 4. The internal DC voltage detection circuit of the drive is damaged.	1. Ensure the grid input voltage is within the allowed range. 2. Ensure the internal braking resistor is not loose or damaged. Ensure the external braking resistor is not damaged. 3. Increase the DEC time. 4. Check R0.07 when the drive is disabled. If it is abnormal and does not match the grid input voltage, replace the drive.
Er13-1	Main circuit undervoltage fault	The detected DC voltage of the drive main circuit is lower than the specified voltage. 1. The grid voltage is too low. 2. The buffer relay is not closed. 3. The drive output power is too high. 4. The internal DC voltage detection circuit of the drive is damaged.	1. Ensure the grid input voltage is within the allowed range. 2. Repower on the drive. Ensure the buffer relay is closed. If the buffer relay is closed, there is a sound indicating actuation. 3. Check R0.07 when the drive is disabled. If it is abnormal and does not match the grid input voltage, replace the drive.
Er14-0	Control power undervoltage fault	The detected control circuit DC voltage of the drive is lower than the specified value. 1. The grid voltage is too low. 2. The internal DC voltage detection circuit of the	1. Ensure the grid input voltage is within the allowed range. 2. Check R0.08 when the drive is disabled. If it is abnormal and does not match the grid

Fault code	Name	Possible cause	Solution
		drive is damaged.	input voltage, replace the drive.
Er17-0	Drive overload fault	The short-time load on the drive is too heavy.	1. The load is too heavy which causes the drive overload. 2. Check whether phase dislocation or phase loss occurred to UVW wiring of the motor, and check whether the encoder is correct. 3. Check whether the motor is compatible with the drive.
Er17-1	Drive overload fault 2	The short-time load on the drive is too heavy.	1. The load is too heavy which causes the drive overload. 2. Check whether phase dislocation or phase loss occurred to UVW wiring of the motor, and check whether the encoder is correct. 3. Check whether the motor is compatible with the drive.
Er18-0	Motor overload fault	1. Long-term overload running. 2. The load is too heavy during the short time.	Replace the drive and motor with the new ones with greater power.
Er18-1	Motor overtemperature fault	Motor temperature exceeds the protection value .	Replace the motor with the new one with greater power.
Er18-2	Motor power cable disconnection	Any two phases or three phases of the motor power cable are not reliably connected to the drive, or the inside of the motor has been damaged.	1. Check whether the motor power cable is broken or disconnected. 2. Check whether the power cable terminal and the drive are plugged tightly. 3. Check whether the power

BARGH MOTION

Fault code	Name	Possible cause	Solution
			cable terminal and the power cable are connected reliably. 4. Check whether the motor is damaged.
Er18-3	Motor phase loss fault	Any one phase of the motor power cable are not reliably connected to the drive, or the inside of the motor has been damaged.	1. Check whether the motor power cable is broken or disconnected. 2. Check whether the power cable terminal and the drive are plugged tightly. 3. Check whether the power cable terminal and the power cable are connected reliably. 4. Check whether the motor is damaged.
Er19-0	Speed fault–Overspeed fault	The motor speed absolute value exceeds the setting of P4.32. 1. The motor stalls or motor phases U, V, and W are in reverse sequence. 2. The electronic gear ratio or motor speed loop control parameters are not set properly. 3. The setting of P4.32 is less than that of P4.31 [Max. speed limit]. 4. The encoder feedback signal is interfered.	1. Check whether the electronic gear ratio parameters are set properly. 2. Check the setting of speed loop control parameters. 3. Check whether the motor cable phase sequence is correct. 4. Check whether the motor encoder is wired properly. 5. Replace the motor with a new one with a higher speed.
Er19-1	Speed fault–FWD overspeed fault	The speed feedback exceeds the setting of P4.40 by more than 20ms.	1. Ensure the encoder is normal. 2. Set P4.40 properly.

Fault code	Name	Possible cause	Solution
Er19-2	Speed fault–REV overspeed fault	The speed feedback exceeds the setting of P4.41 by more than 20ms.	1. Ensure the encoder is normal. 2. Set P4.41 properly.
Er19-3	Speed fault–Incorrect overspeed parameter setting	The setting of P4.40 is less than 0 or that of P4.41 is greater than 0.	1. Check whether the encoder is connected reliably. 2. Set P4.40 or P4.41 properly.
Er19-4	Overspeed fault–Out-of-control fault	The servo motor is out of control.	1. Ensure the encoder is connected properly. 2. Check whether the power cable phase sequence is correct. 3. Set P4.35 to 0 to disable out-of-control speed detection.
Er20-0	Speed out-of-tolerance-range fault	In non-torque mode, the deviation between the motor speed and speed command exceeds the setting of P4.39. 1. The motor phases U, V, and W are in reverse sequence or motor cables are not connected. 2. The motor load is too heavy, which causes motor stalling. 3. The drive force is insufficient, which causes motor stalling. 4. The speed loop control parameters are not set properly. 5. The setting of P4.39 is too low.	1. Ensure the motor phases are in correct sequence and motor cables are connected properly. 2. Check whether the conveyor belt or chain is too tight or the workbench reaches the boundary or encounters obstacles. 3. Ensure the speed loop control parameters are set properly, the drive is intact and undamaged, and the servo system model is correct. 4. Increase the setting of P4.39. 5. Set P4.39 to 0, which disables the detecting for a speed out-of-tolerance fault.

BARGH MOTION

Fault code	Name	Possible cause	Solution
Er21-0	Position overtravel - FWD overtravel	In position mode, the CCW limit switch is touched or the accumulated feedback pulse exceeds the setting of P0.35.	1. Check whether FWD limit switch signal is correct. 2. Check whether P0.35 is set properly.
Er21-1	Position overtravel - REV overtravel	In position mode, the REV limit switch is touched or the accumulated feedback pulse exceeds the setting of P0.36.	1. Check whether REV limit switch signal is correct. 2. Check whether P0.36 is set properly.
Er22-0	Position out-of-tolerance fault	1. Servo response time is too slow. Therefore the residual pulses exceed the setting of P4.33. 2. The motor load is too heavy, which causes motor stalling. 3. Pulse input frequency is too high, exceeding the max. motor speed. 4. The step variable in the position command input exceeds the setting of P4.33.	1. Check whether the conveyor belt or chain is too tight or the workbench reaches the boundary or encounters obstacles. 2. Increase the settings of position loop or speed feed-forward gain parameters. Alternatively, increase the setting of P4.33. 3. Adjust electronic gear ratio parameters. 4. Decrease the variation of position command input.
Er22-1	Hybrid control deviation too large	In fully-closed loop control, the feedback position deviation between the linear encoder and encoder exceeds the setting of P4.64.	1. Ensure the motor and load are connected properly. 2. Ensure the linear encoder and drive are connected properly. 3. Ensure P4.60, P4.61, and P4.62 are set properly.
Er22-2	Position increment overflow fault	The single variation in the position command after electronic gear ratio conversion exceeds (2^{31}-1).	1. Reduce the single variable in the position command. 2. Modify the electronic gear ratio to a proper setting.

برق موشن
BARGH MOTION

Fault code	Name	Possible cause	Solution
Er23-0	Drive overtemperature fault	The ambient temperature of the drive exceeds the specified temperature. The drive is overloaded.	1. Reduce the ambient temperature and improve the ventilation condition. 2. Replace the servo system with a new one with greater power. 3. Increase the ACC/DEC time and reduce the load.
Er24-0	Communication fault-PWK parameter ID error	The PWK parameter ID is incorrect.	View the manual and ensure that the PWK parameter ID is the same as the corresponding parameter ID.
Er24-1	Communication fault-PWK parameter out-of-range	The PWK parameter value is out of the allowed range.	View the manual and ensure that the PWK parameter value is within the allowed range.
Er24-2	Communication fault-Read-only PWK parameter	The PWK parameter is read only	View the manual and ensure that the PWK parameter can be read and written.
Er24-3	Communication fault-PZD setting parameter does not exist	The PZD setting parameter ID is incorrect.	View the manual and ensure that the PZD setting parameter ID is the same as the corresponding parameter ID.
Er24-4	Communication fault-PZD setting parameter property does not match	The PZD setting parameter property is not instant effective.	View the manual and ensure that the PZD setting parameter property is instant effective.
Er24-8	Communication fault-EtherCAT communication card initialization fault	The initialization of EtherCAT communication card failed.	Contact the manufacturer or replace the drive.
Er24-9	Communication fault-EtherCAT communication card EEPROM loading fault	The EtherCAT chip is in poor contact.	Use TwinCAT tool to download xml file to EtherCAT EEPROM.

Fault code	Name	Possible cause	Solution
Er24-a	Communication fault-EtherCAT communication DC Sync0 interruption exception fault	DC Sync0 interruption signal is not detected during a period of time under DC sync working mode.	1. Check whether interruption causes data loss. 2. Check whether EtherCAT master can work normally.
Er24-b	Communication fault-EtherCAT communication Port0 disconnection fault	After the drive is enabled, the network cable is not inserted properly, or the EtherCAT master does not run properly.	1. Check whether network cable is connected properly, the connection mode of network cable is top-in and bottom-out. 2. Check for and handle the interference problem. 3. Check whether EtherCAT master can work properly.
Er24-c	Communication fault-No PDO data in EtherCAT communication DC mode	No PDO data in EtherCAT communication DC mode	No PDO data is received after the drive has been enabled for a period of time.
Er25-2	Application fault–Phase sequence detection timeout	An exception occurred in the phase sequence detection.	Check whether the motor shaft can rotate freely or the load is heavy, and carry out the detection after repower-on.
Er25-3	Application fault–Phase sequence detection failed	An exception occurred in the phase sequence detection.	Check whether the motor shaft can rotate freely or the load is heavy, and carry out the detection after repower-on.
Er25-4	Application fault–Encoder offset angle test timeout	An exception occurred in the encoder offset angle test.	Ensure the motor shaft can rotate freely and then carry out the test after repower-on.
Er25-5	Application fault–Encoder offset angle test failed	There is great fluctuation in current feedback in the encoder offset angle test.	Reduce the setting of P4.53 and then carry out the test after repower-on.
Er25-6	Application fault–Homing offside	The limit switch or software limit is enabled during homing.	Modify the setting of P5.10 and then execute homing after

BARGH MOTION

Fault code	Name	Possible cause	Solution
			re-power on.
Er25-7	Application fault–Inertia identifying failed	1. During inertia identifying, the motor stops rotating with vibration of longer than 3.5s. 2. The actual ACC time for inertia identifying is too short. 3. The inertia identifying speed is lower than 150r/min.	1. Improve the mechanical rigidity properly. 2. Increase the setting of P1.07. 3. Increase the setting of P1.06.
Er25-8	Application fault–Magnetic pole detection failed	1. The power cable phase sequence is incorrect. 2. The encoder direction conflicts with the power cable phase sequence. 3. External force or overload occurs in the magnetic pole detection.	1. Check the wiring of the power cable. 2. Check whether the encoder works normally. 3. Check whether external force occurs in the motor running.
Er25-9	Application fault–Overtravel/over speed in confirmation of magnetic pole detection	The motor motion range is too large or speed is too fast in the confirmation of magnetic pole.	Increase the setting of P6.70.
Er25-a	Application fault–Out-of-range in magnetic pole detection	The motor motion range exceeds the specified value in the magnetic pole detection.	Increase the settings of P6.60 and P6.61.

BARGH MOTION

9.2 CANopen communication faults and solutions

Fault code	Name	Possible cause	Solution
Er22-3	Synchronization signal timeout	In Interpolation position mode, the time interval between two adjacent synchronization frame signals is more than twice the communication cycle.	1. Check communication cables to improve communication reliability. 2. Ensure the synchronization frame generation interval of the signal generation source is correct.
Er22-4	Full position command buffer	CANopen PTP position command buffer is full.	Increase the time interval for sending PTP control position commands.
Er26-0	CANopen offline	The master does not receive heartbeat packets from a slave within a period of time.	Check communication connection.
Er26-1	SDO index does not exist	When the SDO reads or writes parameters, the index does not exist in the object dictionary or is not supported by the servo drive.	Check the indexes queried by the master and supported by the drive, and modify the EDS file.
Er26-2	SDO sub-index does not exist	When the SDO reads or writes parameters, the index exists in the object dictionary, but the sub-index does not exist in the dictionary or is not supported by the servo drive.	Check the indexes and sub-indexes queried by the master and supported by the drive, and modify the EDS file.
Er26-3	Incorrect SDO data length	The length information in SDO read or write commands does not match the data length in the servo drive object dictionary.	Adjust the length in SDO read or write commands according to the data length in the servo drive object dictionary.
Er26-4	SDO data out of range	The data that the SDO writes exceeds the data range in	Adjust the size of data written by the SDO according to the

BARGH MOTION

Fault code	Name	Possible cause	Solution
		the servo drive object dictionary.	data range in the object dictionary.
Er26-5	Read-only and non-modifiable	There are attempts to modify read-only parameters.	Check whether the parameter to be written is read-only data.
Er26-6	Incorrect PDO mapping length	The total length of data mapped from the PDO exceeds 64 bits.	Check the total length of PDO mapping.
Er26-7	PDO mapping data does not exist	PDO mapping data cannot be found in the object dictionary.	Check whether the PDO mapping index and sub-index exist in the object dictionary.
Er26-8	PDO is not allowed to be changed during operating	There are attempts to modify PDO mappings.	Switch the CANopen state machine to pre-operational and then modify PDO mappings.
Er26-9	PDO mapping is not allowed	There are attempts to map parameters that disallow mapping to the PDO.	Check whether there are read-only PDO parameters being mapped into RPDO.
Er26-a	Synchronization signal is too fast	In synchronization working mode, the number of frames received by a slave exceeds the range supported by the baud rate.	1. Modify the time interval for the master to send data frame or synchronization frame. 2. Change the communication baud rate.
Er26-b	Receiving fault	CAN communication is offline or the error receiving counter exceeds 128.	1. Check communication connection. 2. Restart the servo drive.
Er26-c	Sending fault	CAN communication is offline or the error sending counter exceeds 128.	1. Check communication connection. 2. Restart the servo drive.
Er26-d	Duplicate synchronization signal	In the case where a slave is configured to generate synchronization signals, external synchronization signals are received.	Modify configuration so that there is only one synchronization signal generation source in the entire communication network.

Fault code	Name	Possible cause	Solution
Er26-e	Bus load ratio too high	In asynchronous working mode, the number of frames received by a slave exceeds the range supported by the baud rate.	1. Modify the time interval for the master to send data frame. 2. Modify the transmission mode of the slave TPDO. 3. Change the communication baud rate.
Er26-f	Incorrect parameter modification state	The SDO attempts to modify parameters in a state that disallows modification.	Adjust the CANopen state machine to the Pre-OP or OP state and then try to modify parameters.

10 Appendix

10.1 Setup parameter list

P-position mode; S-speed mode; T-torque mode.

For function codes:

The function codes with the superscript of “1” indicate that these parameters can be valid only when the system is reset and restarted or repowered after disconnection.

The function codes with the superscript of “2” indicate that these parameters are valid when the servo drive stops. The modification during operation is invalid.

The function codes with the superscript of “*” indicate that these parameters are not saved after power off.

Function code	Name	Unit	Range	Default	Applicable mode
P0 Basic control					
P0.00[1]	Motor model	-	0–9999999	1010104	PST
P0.01[1]	Encoder type	-	1–12	4	PST
P0.02[1]	Forward rotation of motor	-	0–1	0	PST
P0.03[1]	Control mode selection	-	0–9	0	PST
P0.04*	Internal enabling command	-	0–1	0	PST
P0.05	Jogging speed	r/min	0–1000	200	PST
P0.06[1]	Numerator of frequency division output coefficient	-	0–(2^{31}-1)	10000	PST
P0.07[1]	Denominator of frequency division output coefficient	-	1–(2^{31}-1)	131072	PST
P0.08[1]	Reverse of frequency division output	-	0–1	0	PST
P0.09	Torque limit mode setting	-	0–6	1	PS
P0.10	Max. torque limit 1	%	0.0–500.0	300.0	PST

Function code	Name	Unit	Range	Default	Applicable mode
P0.11	Max. torque limit 2	%	0.0–500.0	300.0	PS
P0.13[1]	External braking resistor power	W	0–5000	200	PST
P0.14[1]	Resistance of the external braking resistor	Ω	1–1000	60	PST
P0.15	Default monitoring parameters	-	0–22	0	PST
P0.16	Parameter modification operation locked	-	0–1	0	PST
P0.17	Mode for writing to EEPROM	-	0–1	0	PST
P0.18*	Factory password	-	0–65535	0	PST
P0.19	Main circuit power AC/DC input selection	-	0–1	0	PST
P0.20[1]	Position command selection	-	0–4	0	P
P0.22[1]	Pulses per motor resolution	reference unit	0–(2^{31}-1)	10000	P
P0.23[1]	Pulse input	-	0–2	0	P
P0.24[1]	Reverse of pulse input direction	-	0–1	0	P
P0.25	Numerator of electronic gear ratio 1	-	0–(2^{31}-1)	0	P
P0.26[2]	Denominator of electronic gear ratio	-	1–(2^{31}-1)	10000	P
P0.27	Numerator of electronic gear ratio 2	-	0–(2^{31}-1)	0	P
P0.28	Numerator of	-	0–(2^{31}-1)	0	P

BARGH MOTION

Function code	Name	Unit	Range	Default	Applicable mode
	electronic gear ratio 3				
P0.29	Numerator of electronic gear ratio 4	-	0–(2^{31}-1)	0	P
P0.33[2]	Smooth filtering of position command	ms	0.0–1000.0	0.0	P
P0.34[2]	FIR filter of position command	ms	0.0–1000.0	0.0	P
P0.35	Software limit in CCW position control	reference unit	-(2^{31}-1)–(2^{31}-1)	0	P
P0.36	Software limit in CW position control	reference unit	-(2^{31}-1)–(2^{31}-1)	0	P
P0.37	Position command mode	-	0–1	0	P
P0.40	Speed command selection	-	0–5	1	S
P0.41	Setting of speed command direction	-	0–1	0	S
P0.42	Analog input 1 gain	[P3.26 unit]/V	10–2000	100	PST
P0.43	Reverse of AI 1	-	0–1	0	PST
P0.45	Dead zone of AI 1	V	0.000–3.000	0.000	PST
P0.46	Internal speed 1/speed limit 1	r/min	-20000–20000	100	ST
P0.47	Internal speed 2/speed limit 2	r/min	-20000–20000	0	ST
P0.48	Internal speed 3/speed limit 3	r/min	-20000–20000	0	ST
P0.49	Internal speed 4/speed limit 4	r/min	-20000–20000	0	ST

Function code	Name	Unit	Range	Default	Applicable mode
P0.50	Internal speed 5	r/min	-20000–20000	0	S
P0.51	Internal speed 6	r/min	-20000–20000	0	S
P0.52	Internal speed 7	r/min	-20000–20000	0	S
P0.53	Internal speed 8	r/min	-20000–20000	0	S
P0.54	ACC time	ms	0–30000	0	S
P0.55	DEC time	ms	0–30000	0	S
P0.56	S-curve ACC time	ms	0–1000	0	S
P0.57	S-curve DEC time	ms	0–1000	0	S
P0.58	Zero speed clamp mode	-	0–3	0	ST
P0.59	Speed threshold of zero speed clamp	r/min	10–20000	30	S
P0.60	Torque command selection	-	0–3	1	T
P0.61	Torque command direction setting	-	0–1	0	T
P0.62	Analog input 2 gain	[P3.27 unit]/V	0–2000	100	PST
P0.63	Reverse of AI 2	-	0–1	0	PST
P0.65	Dead zone of AI 2	V	0.000–3.000	0.000	PST
P0.66	Internal torque command	%	-500.0–500.0	0.0	T
P0.67	Speed limit mode	-	0–1	0	T
P0.68	RAMP time of torque command	ms	0–10000	0	T
P0.69	DEC time for quick stop	ms	0–10000	500	PST
P0.70[1]	Absolute encoder mode setting	-	0–1	0	PST
P0.71*	Clear absolute encoder multiturn	-	0–1	0	PST
P0.90	Max. speed limit of control mode switching	r/min	0–1000	100	PST

Function code	Name	Unit	Range	Default	Applicable mode
P0.91	Positioning reference of control mode switching	reference unit	-1–(2^{31}-1)	-1	PST
P0.92	Position mode switching exit mode	-	0–1	0	PST
P1 Autotuning control					
P1.00	Tune inertia online	-	0–1	0	PST
P1.01	Inertia ratio 1	%	0–10000	250	PST
P1.02	Inertia ratio 2	%	0–10000	250	PST
P1.03	Machine rigidity setting	-	0–31	13	PST
P1.04*	Tune inertia offline	-	0–1	0	PST
P1.05	Operation mode of inertia identification	-	0–3	0	PST
P1.06	Movable range of inertia identification	r	0.2–20.0	2.0	PST
P1.07	ACC time constant of inertia identification	ms	2–1000	200	PST
P1.08	Speed level of inertia identification	-	0–3	1	PST
P1.19	Resonance detection sensitivity	%	0.2–100.0	5.0	PST
P1.20	Resonance detection mode	-	0–7	0	PST
P1.21*	Mechanical resonant frequency 1	Hz	0–5000	5000	PST

Function code	Name	Unit	Range	Default	Applicable mode
P1.22*	Mechanical resonant frequency 2	Hz	0–5000	5000	PST
P1.23	Frequency of notch filter 1	Hz	50–5000	5000	PST
P1.24	Q factor of notch filter 1	-	0.50–16.00	1.00	PST
P1.25	Depth of notch filter 1	%	0–100	0	PST
P1.26	Frequency of notch filter 2	Hz	50–5000	5000	PST
P1.27	Q factor of notch filter 2	-	0.50–16.00	1.00	PST
P1.28	Depth of notch filter 2	%	0–100	0	PST
P1.29	Frequency of notch filter 3	Hz	50–5000	5000	PST
P1.30	Q factor of notch filter 3	-	0.50–16.00	1.00	PST
P1.31	Depth of notch filter 3	%	0–100	0	PST
P1.32	Frequency of notch filter 4	Hz	50–5000	5000	PST
P1.33	Q factor of notch filter 4	-	0.50–16.00	1.00	PST
P1.34	Depth of notch filter 4	%	0–100	0	PST
P1.35	Vibration control mode in position command	-	0–2	0	P
P1.36	Vibration control frequency 1	Hz	0.0–200.0	0.0	P
P1.37	Coefficient of vibration control	-	0.00–1.00	1.00	P

BARGH MOTION

Function code	Name	Unit	Range	Default	Applicable mode
	filter 1				
P1.38	Vibration control frequency 2	Hz	0.0–200.0	0.0	P
P1.39	Coefficient of vibration control filter 2	-	0.00–1.00	1.00	P
P2 Motor control					
P2.00	1st speed gain	Hz	0.0–3276.7	27.0	PST
P2.01	1st speed integral time constant	ms	0.1–1000.0	21.0	PST
P2.02	1st position gain	1/s	0.0–3276.7	48.0	P
P2.03	1st speed detection filter	Hz	100–5000	5000	PST
P2.04	1st torque filter	ms	0.00–25.00	0.84	PST
P2.05	2st speed gain	Hz	0.0–3276.7	27.0	PST
P2.06	2st speed integral time constant	ms	0.1–1000.0	1000.0	PST
P2.07	2st position gain	1/s	0.0–3276.7	57.0	P
P2.08	2st speed detection filter	Hz	100–5000	5000	PST
P2.09	2st torque filter	ms	0.00–25.00	0.84	PST
P2.10	Speed feed-forward gain	%	0.0–100.0	0.0	P
P2.11	Speed feed-forward filter time	ms	0.00–64.00	0.50	P
P2.12	Torque feed-forward gain	%	0.0–100.0	0.0	PS
P2.13	Torque feed-forward filter time	ms	0.00–64.00	0.00	PS
P2.14	1st IPPI coefficient	%	0–1000	100	PST
P2.15	2nd IPPI coefficient	%	0–1000	100	PST
P2.20	2nd gain setting	-	0–1	1	PST

BARGH MOTION

Function code	Name	Unit	Range	Default	Applicable mode
P2.22	Switching trigger in position control	-	0–9	0	P
P2.23	Switching delay in position control	ms	0–10000	0	P
P2.24	Switching level in position control	-	0–20000	0	P
P2.25	Switching delay in position control	-	0–20000	0	P
P2.26	Position gain switching time	ms	0–10000	0	P
P2.27	Switching mode of speed control	-	0–5	0	S
P2.28	Switching delay in position control	ms	0–10000	0	S
P2.29	Switching level of speed control	-	0–20000	0	S
P2.30	Switching delay in speed control	-	0–20000	0	S
P2.31	Switching mode of torque control	-	0–3	0	T
P2.32	Switching delay in torque control	ms	0–10000	0	T
P2.33	Switching level of torque control	-	0–20000	0	T
P2.34	Switching delay in torque control	-	0–20000	0	T
P2.41[2]	Disturbance observer	-	0–2	0	PST
P2.42	Disturbance observer compensation gain	%	0–100	0	PS
P2.43	Disturbance observer cut-off	Hz	0–3000	200	PS

Function code	Name	Unit	Range	Default	Applicable mode
	frequency				
P2.44	Torque command offset	%	-500.0–500.0	0.0	PST
P2.50[2]	Fully-closed loop vibration suppressor	-	0–2	0	PS
P2.51	Fully-closed loop vibration suppressor cut-off frequency	Hz	1.0–500.0	100.0	PS
P2.52	Fully-closed loop vibration suppressor compensation gain	%	0–1000	0	PS
P2.53	Medium frequency vibration control switch	-	0–1	0	PST
P2.54	Medium frequency vibration control frequency	Hz	1–2000	100	PST
P2.55	Inertia fine tuning of medium frequency vibration control	%	1–1000	100	PST
P2.56	Attenuation gain of medium frequency vibration control	%	0–1000	0	PST
P2.57	Fine tuning of medium frequency vibration control filter time 1	0.01ms	-10–10	0	PST

Function code	Name	Unit	Range	Default	Applicable mode
P2.58	Fine tuning of medium frequency vibration control filter time 2	0.01ms	-10–10	0	PST
P2.60[2]	Speed observer	-	0–2	0	PST
P2.61	Speed observer gain	Hz	1–1000	100	PST
P2.70	Friction compensation cut-off speed	r/min	0–1000	20	PST
P2.71	Positive torque coefficient of friction compensation	%/(10r/min)	0.0–100.0	0.0	PST
P2.72	Negative torque coefficient of friction compensation	%/(10r/min)	-100.0–0.0	0.0	PST
P2.73	Friction compensation	-	0–1	0	PST
P2.85	Torque feed-forward selection	-	0–1	0	PS
P3 I/O management					
P3.00[1]	Input configuration of digital 1	-	0x000–0x136	0x003	PST
P3.01[1]	Input configuration of digital 2	-	0x000–0x136	0x00D	PST
P3.02[1]	Input configuration of digital 3	-	0x000–0x136	0x004	PST
P3.03[1]	Input configuration of digital 4	-	0x000–0x136	0x016	PST
P3.04[1]	Input configuration of digital 5	-	0x000–0x136	0x019	PST

BARGH MOTION

Function code	Name	Unit	Range	Default	Applicable mode
P3.05[1]	Input configuration of digital 6	-	0x000–0x136	0x01A	PST
P3.06[1]	Input configuration of digital 7	-	0x000–0x136	0x001	PST
P3.07[1]	Input configuration of digital 8	-	0x000–0x136	0x002	PST
P3.08[1]	Input configuration of digital 9	-	0x000–0x136	0x007	PST
P3.08[1]	Input configuration of digital 10	-	0x000–0x136	0x008	PST
P3.10[1]	Output configuration of digital 1	-	0x000–0x11F	0x001	PST
P3.11[1]	Output configuration of digital 2	-	0x000–0x11F	0x003	PST
P3.12[1]	Output configuration of digital 3	-	0x000–0x11F	0x007	PST
P3.13[1]	Output configuration of digital 4	-	0x000–0x11F	0x00D	PST
P3.16	DI-based encoder capturing	-	0–778	0	PST
P3.20	Offset of analog input 1	V	-10.000–10.000	0.000	PST
P3.21	Filter of analog input 1	ms	0.0–1000.0	1.0	PST
P3.22	OV protection threshold of analog input 1	V	0.000–10.000	0.000	PST
P3.23	Offset of analog input 2	V	-10.000–10.000	0.000	PST

Function code	Name	Unit	Range	Default	Applicable mode
P3.24	Filter of analog input 2	ms	0.0–1000.0	0.0	PST
P3.25	OV protection threshold of analog input 2	V	0.000–10.000	0.000	PST
P3.26[1]	Function of analog input 1	-	0–7	0	PST
P3.27[1]	Function of analog input 2	-	0–7	3	PST
P3.28	Analog speed compensation gain	%	0.0–100.0	0.0	P
P3.29	Analog torque compensation gain	%	0.0–100.0	0.0	PST
P3.30[1]	Function of analog output 1	-	0–19	0	PST
P3.31	Voltage gain of analog output 1	[P3.30 unit]/V	1–214748364	1	PST
P3.32[1]	Function of analog output 2	-	0–19	0	PST
P3.33	Voltage gain of analog output 2	[P3.32 unit]/V	1–214748364	1	PST
P3.34	Offset voltage of analog output 1	V	-10.000–10.000	0.000	PST
P3.35	Offset voltage of analog output 2	V	-10.000–10.000	0.000	PST
P3.36[1]	Analog output monitoring setting	-	0–2	0	PST
P3.40[1]	Disable travel limit switch	-	0–2	1	PST
P3.41[1]	Disable emergency stop switch	-	0–1	1	PST

برق
BARGH MOTION

Function code	Name	Unit	Range	Default	Applicable mode
P3.43[1]	Digital input filter	0.125ms	1–800	1	PST
P3.44	Command pulse input invalid setting disabled	-	0–1	0	P
P3.45[1]	Residual pulse clearing mode	-	0–1	1	P
P3.50	Range of position arrival	reference unit	$0–2^{18}$	100	P
P3.51	Output mode of position arrival	-	0–4	0	P
P3.52	Hold time of position arrival output terminal	ms	0–30000	0	P
P3.53	Speed consistency threshold	r/min	10–20000	50	PST
P3.54	Speed reaching range	r/min	10–20000	1000	PST
P3.55	Zero speed range	r/min	10–20000	50	PST
P3.56	Servo lock time after braking	ms	0–1000	50	PST
P3.57	Electromagnetic brake closing delay	ms	0–30000	500	PST
P3.58[1]	Motor speed threshold at brake release	r/min	0–1000	30	PST
P3.59	Torque reaching range	%	5.0–300.0	50.0	T
P3.77	Analog input deadzone mode	-	0–1	0	PST
P3.90	Pulse input filter	-	0–7	2	PST
P3.92	Pulse feedback filter	-	0–7	2	PST
P4 Extension and application					

Function code	Name	Unit	Range	Default	Applicable mode
P4.01[1]	485 local communication address	-	1–255	1	PST
P4.02[1]	CAN communication baud rate	-	0–5	1	PST
P4.03[1]	485 communication baud rate	-	0–3	1	PST
P4.04[1]	485 communication parity mode	-	0–5	0	PST
P4.05[1]	CAN communication node	-	1–127	1	PST
P4.06	485 communication fault clearing mode	-	0–1	1	PST
P4.07[1]	EtherCAT synchronous cycle	-	0–3	2	PST
P4.08[1]	EtherCAT synchronous type	-	0–2	0	PST
P4.09[1]	EtherCAT fault detection time	ms	0–1000	100	PST
P4.10[1]	Upper computer type	-	0–1	0	PST
P4.11*	Bus servo enabling	-	0–1	0	PST
P4.12*	Bus position command	reference unit	$-(2^{31}-1)$–$(2^{31}-1)$	0	P
P4.13*	Bus speed command	r/min	-20000–20000	0	S
P4.14*	Bus torque	%	-500.0–500.0	0.0	T

BARGH MOTION

Function code	Name	Unit	Range	Default	Applicable mode
	command				
P4.15*	Control mode switching command	-	0–1	0	PST
P4.16*	Gain switching command	-	0–1	0	PST
P4.17*	Electronic gear ratio switching command	-	0–3	0	P
P4.18*	Inertia ratio switching command	-	0–1	0	PST
P4.19*	Zero speed clamp command	-	0–1	0	ST
P4.20*	Clearing residual pulses	-	0–1	0	P
P4.21*	Torque limit switching command	-	0–1	0	PST
P4.22*	External fault command	-	0–1	0	PST
P4.23*	Emergency stop command	-	0–1	0	PST
P4.24*	Input command of vibration control switching	-	0–1	0	P
P4.30	Stop mode	-	0–3	0	PST
P4.31	Max. speed limit	r/min	0–20000	5000	PST
P4.32	Overspeed threshold	r/min	0–20000	6000	PST
P4.33	Pulse threshold of position deviation	reference unit	$0–2^{27}$	100000	P
P4.34[1]	Brake overload detection selection	-	0–2	0	PST

برق
BARGH MOTION

Function code	Name	Unit	Range	Default	Applicable mode
P4.36[1]	Main power UV protection	-	0–1	1	PST
P4.37	Main power UV detection time	ms	70–2000	70	PST
P4.39	Speed deviation setting	r/min	0–20000	0	PS
P4.40	Forward speed limit	r/min	0–20000	20000	PST
P4.41	Reverse speed limit	r/min	-20000–0	-20000	PST
P4.42	Internal speed with high resolution	r/min	-20000.0–20000.0	0.0	PST
P4.45	Temperature protection threshold of medium-power motor	°C	0–200	0	PST
P4.50[1]	Encoder phase-Z offset	pulse	0–(2^{20}-1)	0	PST
P4.51	Torque limit switching time 1	ms/100%	0–4000	0	PS
P4.52	Torque limit switching time 2	ms/100%	0–4000	0	PS
P4.53	Current loop response adjustment	%	10.0–200.0	100.0	PST
P4.54[1]	Delay after power-on initialization	ms	0–200000	0	PST
P4.60[1]	Frequency-division numerator of external linear encoder	-	1–(2^{31}-1)	10000	P

Function code	Name	Unit	Range	Default	Applicable mode
P4.61[1]	Frequency-division denominator of external linear encoder	-	1–(2^{31}-1)	10000	P
P4.62[1]	Direction reversal of external linear encoder	-	0–1	0	P
P4.64[1]	Hybrid control deviation limit	reference unit	0–2^{27}	160000	P
P4.65[1]	Threshold for hybrid-control deviation clearing	r	0–100	0	P
P4.67[1]	External linear encoder pulse output mode of phase AB	-	0–1	0	P
P4.68[1]	External linear encoder (or encoder 2) resolution	pulse	1–(2^{31}-1)	10000	P
P4.69[1]	Frequency division output source	-	0–4	0	PST
P4.70[1]	External linear encoder (2nd encoder) Z signal type	-	0–3	0	PST
P4.71[1]	Type of 2nd encoder		1–12	2	PST
P4.72[1]	Cascading mode of 2nd encoder		0–4	0	PST
P4.87	CANopen communication cycle	μs	0–(2^{31}-1)	0	PST

برق
BARGH MOTION

Function code	Name	Unit	Range	Default	Applicable mode
P4.88	CANopen heartbeat cycle	ms	0–32767	1000	PST
P4.89	Automatic stop at CANopen disconnection	-	0–1	0	PST
P4.90*	Fault recovery	-	0–1	0	PST
P4.91*	Saving parameters	-	0–1	0	PST
P4.92*	Restoring to default	-	0–1	0	PST
P4.93*	Enable the reading of the fault record	-	0–1	0	PST
P4.94*	Enable the clearing of the fault record	-	0–1	0	PST
P4.95*	Group number of the fault record	-	0–9	0	PST
P4.96*	(Reserved)	-	-	-	PST
P4.97*	EEPROM operation of communication encoder	-	0–1	0	PST
P4.98*	EEPROM data fault block of communication encoder	-	0–1	1	PST
P5 Program jog, homing, and PTP control					
P5.00	Jog mode selection	-	0–6	0	P
P5.01	JOG movement amount	reference unit	$1–2^{30}$	50000	P
P5.02	Jogging speed setting	r/min	1–5000	500	P
P5.03	Jogging ACC/DEC	ms	2–10000	100	P

Function code	Name	Unit	Range	Default	Applicable mode
	time				
P5.04	Jogging wait time	ms	0–10000	100	P
P5.05	Jogging cycle times	-	0–10000	1	P
P5.10[2]	Homing mode	-	0–128	0	P
P5.11	Homing upon power-on	-	0–1	0	P
P5.12	High speed at homing step 1	r/min	0–2000	100	P
P5.13	Low speed at homing step 2	r/min	0–60	20	P
P5.14	Home setting	reference unit	$-(2^{31}-1)$–$(2^{31}-1)$	0	P
P5.15*	Homing trigger command	-	0–1	0	P
P5.16	Homing associated action	-	0–3	0	P
P5.17	Target speed after homing	r/min	1–5000	100	P
P5.18	ACC/DEC time for target speed after homing	ms	0–32767	300	P
P5.19	Target position after homing	reference unit	$-(2^{31}-1)$–$(2^{31}-1)$	0	P
P5.20*	PTP trigger signal	-	-1–2048	-1	P
P5.21	Target speed 00	r/min	0–6000	20	P
P5.22	Target speed 01	r/min	0–6000	50	P
P5.23	Target speed 02	r/min	0–6000	100	P
P5.24	Target speed 03	r/min	0–6000	200	P
P5.25	Target speed 04	r/min	0–6000	300	P
P5.26	Target speed 05	r/min	0–6000	500	P
P5.27	Target speed 06	r/min	0–6000	600	P
P5.28	Target speed 07	r/min	0–6000	800	P
P5.29	Target speed 08	r/min	0–6000	1000	P

برق بارگ موشن
BARGH MOTION

Function code	Name	Unit	Range	Default	Applicable mode
P5.30	Target speed 09	r/min	0–6000	1300	P
P5.31	Target speed 10	r/min	0–6000	1500	P
P5.32	Target speed 11	r/min	0–6000	1800	P
P5.33	Target speed 12	r/min	0–6000	2000	P
P5.34	Target speed 13	r/min	0–6000	2300	P
P5.35	Target speed 14	r/min	0–6000	2500	P
P5.36	Target speed 15	r/min	0–6000	3000	P
P5.37	ACC/DEC time 00	ms	0–32767	200	P
P5.38	ACC/DEC time 01	ms	0–32767	300	P
P5.39	ACC/DEC time 02	ms	0–32767	500	P
P5.40	ACC/DEC time 03	ms	0–32767	600	P
P5.41	ACC/DEC time 04	ms	0–32767	800	P
P5.42	ACC/DEC time 05	ms	0–32767	900	P
P5.43	ACC/DEC time 06	ms	0–32767	1000	P
P5.44	ACC/DEC time 07	ms	0–32767	1200	P
P5.45	ACC/DEC time 08	ms	0–32767	1500	P
P5.46	ACC/DEC time 09	ms	0–32767	2000	P
P5.47	ACC/DEC time 10	ms	0–32767	2500	P
P5.48	ACC/DEC time 11	ms	0–32767	3000	P
P5.49	ACC/DEC time 12	ms	0–32767	5000	P
P5.50	ACC/DEC time 13	ms	0–32767	8000	P
P5.51	ACC/DEC time 14	ms	0–32767	50	P
P5.52	ACC/DEC time 15	ms	0–32767	30	P
P5.53	Delay time 00	ms	0–32767	0	P
P5.54	Delay time 01	ms	0–32767	100	P
P5.55	Delay time 02	ms	0–32767	200	P
P5.56	Delay time 03	ms	0–32767	400	P
P5.57	Delay time 04	ms	0–32767	500	P
P5.58	Delay time 05	ms	0–32767	800	P
P5.59	Delay time 06	ms	0–32767	1000	P
P5.60	Delay time 07	ms	0–32767	1500	P
P5.61	Delay time 08	ms	0–32767	2000	P
P5.62	Delay time 09	ms	0–32767	2500	P

برق موتور
BARGH MOTION

Function code	Name	Unit	Range	Default	Applicable mode
P5.63	Delay time 10	ms	0–32767	3000	P
P5.64	Delay time 11	ms	0–32767	3500	P
P5.65	Delay time 12	ms	0–32767	4000	P
P5.66	Delay time 13	ms	0–32767	4500	P
P5.67	Delay time 14	ms	0–32767	5000	P
P5.68	Delay time 15	ms	0–32767	5500	P
P5.69	PTP control buffer switch	-	0–1	0	P
P5.70	Disk single-turn resolution	pulse	$-(2^{31}-1)$–$(2^{31}-1)$	10000	P
P5.71	Disk homing switch	-	0–3	0	P
P5.72	Super multiturn mode	-	0–1	0	P
P5.73	Digital trigger mode for PTP control	-	0–1	0	P
P5.74	Digital output mode for PTP control	-	0–4	0	P
P5.75	Enable PTP interruption suspend	-	0–1	0	P
P6 Application functions					
P6.00	Forward low jogging speed	r/min	0–6000	5	P
P6.01	Reverse low jogging speed	r/min	-6000–0	-5	P
P6.02	Data latching switch	-	0–1	0	P
P6.03	Position latching save mode	-	0–1	0	P
P6.04	Forward high jogging speed	r/min	0–6000	60	P

برق
BARGH MOTION

Function code	Name	Unit	Range	Default	Applicable mode
P6.05	Reverse high jogging speed	r/min	-6000–0	-60	P
P6.06	Enable terminal jogging	-	0–1	1	P
P6.20	Turret function switch	-	0–1	0	P
P6.21	Knives per turret	piece	1–128	16	P
P6.22	Pulses per turret rotation	reference unit	2–(2^{31}-1)	10000	P
P6.23	Turret starting point	reference unit	-(2^{31}-2)–(2^{31}-2)	0	P
P6.30	Gantry synchronization function switch	-	0–1	0	P
P6.31	Speed control gain for gantry synchronization	Hz	0.0–3276.7	0	P
P6.32	Speed control integral for gantry synchronization	ms	0.1–1000	1000	P
P6.33	Position control gain for gantry synchronization	1/s	0.0–3276.7	1000	P
P6.34	Torque filter for gantry synchronization compensation	ms	0.00–64.00	0.00	P
P6.35	Speed filter for gantry synchronization compensation	ms	0.00–64.00	0.00	P
P6.36	Bandwidth ratio for gantry synchronization	%	0–1000	0	P

Function code	Name	Unit	Range	Default	Applicable mode
	control				
P6.37	Master/slave selection for gantry synchronization	-	0–1	0	P
P6.38	Retreat distance for gantry synchronization alignment	reference unit	$-(2^{31}-2)$–$(2^{31}-2)$	10000	P
P6.39	Retreat speed for gantry synchronization alignment	r/min	1–200	60	P
P6.40	Approaching speed for gantry synchronization alignment	r/min	1–60	5	P
P6.41	Gantry alignment direction	-	0–1	0	P
PtP0 PTP control					
PtP0.00	Control word of segment 00	-	0–0x7FFFFFFF	0x00000000	P
PtP0.01	Position of segment 00	reference unit	$-(2^{31}-1)$–$(2^{31}-1)$	0	P
PtP0.02	Control word of segment 01	-	0–0x7FFFFFFF	0x00000000	P
PtP0.03	Position of segment 01	reference unit	$-(2^{31}-1)$–$(2^{31}-1)$	0	P
PtP0.04	Control word of segment 02	-	0–0x7FFFFFFF	0x00000000	P
PtP0.05	Position of segment 02	reference unit	$-(2^{31}-1)$–$(2^{31}-1)$	0	P
PtP0.06	Control word of segment 03	-	0–0x7FFFFFFF	0x00000000	P

برق
BARGH MOTION

Function code	Name	Unit	Range	Default	Applicable mode
PtP0.07	Position of segment 03	reference unit	$-(2^{31}-1)$–$(2^{31}-1)$	0	P
PtP0.08	Control word of segment 04	-	0–0x7FFFFFFF	0x00000000	P
PtP0.09	Position of segment 04	reference unit	$-(2^{31}-1)$–$(2^{31}-1)$	0	P
PtP0.10	Control word of segment 05	-	0–0x7FFFFFFF	0x00000000	P
PtP0.11	Position of segment 05	reference unit	$-(2^{31}-1)$–$(2^{31}-1)$	0	P
PtP0.12	Control word of segment 06	-	0–0x7FFFFFFF	0x00000000	P
PtP0.13	Position of segment 06	reference unit	$-(2^{31}-1)$–$(2^{31}-1)$	0	P
PtP0.14	Control word of segment 07	-	0–0x7FFFFFFF	0x00000000	P
PtP0.15	Position of segment 07	reference unit	$-(2^{31}-1)$–$(2^{31}-1)$	0	P
PtP0.16	Control word of segment 08	-	0–0x7FFFFFFF	0x00000000	P
PtP0.17	Position of segment 08	reference unit	$-(2^{31}-1)$–$(2^{31}-1)$	0	P
PtP0.18	Control word of segment 09	-	0–0x7FFFFFFF	0x00000000	P
PtP0.19	Position of segment 09	reference unit	$-(2^{31}-1)$–$(2^{31}-1)$	0	P
PtP0.20	Control word of segment 10	-	0–0x7FFFFFFF	0x00000000	P
PtP0.21	Position of segment 10	reference unit	$-(2^{31}-1)$–$(2^{31}-1)$	0	P
PtP0.22	Control word of segment 11	-	0–0x7FFFFFFF	0x00000000	P
PtP0.23	Position of segment 11	reference unit	$-(2^{31}-1)$–$(2^{31}-1)$	0	P

برق موشن
BARGH MOTION

Function code	Name	Unit	Range	Default	Applicable mode
PtP0.24	Control word of segment 12	-	0–0x7FFFFFFF	0x00000000	P
PtP0.25	Position of segment 12	reference unit	$-(2^{31}-1)$–$(2^{31}-1)$	0	P
PtP0.26	Control word of segment 13	-	0–0x7FFFFFFF	0x00000000	P
PtP0.27	Position of segment 13	reference unit	$-(2^{31}-1)$–$(2^{31}-1)$	0	P
PtP0.28	Control word of segment 14	-	0–0x7FFFFFFF	0x00000000	P
PtP0.29	Position of segment 14	reference unit	$-(2^{31}-1)$–$(2^{31}-1)$	0	P
PtP0.30	Control word of segment 15	-	0–0x7FFFFFFF	0x00000000	P
PtP0.31	Position of segment 15	reference unit	$-(2^{31}-1)$–$(2^{31}-1)$	0	P
PtP0.32	Control word of segment 16	-	0–0x7FFFFFFF	0x00000000	P
PtP0.33	Position of segment 16	reference unit	$-(2^{31}-1)$–$(2^{31}-1)$	0	P
PtP0.34	Control word of segment 17	-	0–0x7FFFFFFF	0x00000000	P
PtP0.35	Position of segment 17	reference unit	$-(2^{31}-1)$–$(2^{31}-1)$	0	P
PtP0.36	Control word of segment 18	-	0–0x7FFFFFFF	0x00000000	P
PtP0.37	Position of segment 18	reference unit	$-(2^{31}-1)$–$(2^{31}-1)$	0	P
PtP0.38	Control word of segment 19	-	0–0x7FFFFFFF	0x00000000	P
PtP0.39	Position of segment 19	reference unit	$-(2^{31}-1)$–$(2^{31}-1)$	0	P
PtP0.40	Control word of segment 20	-	0–0x7FFFFFFF	0x00000000	P

Function code	Name	Unit	Range	Default	Applicable mode
PtP0.41	Position of segment 20	reference unit	$-(2^{31}-1)$–$(2^{31}-1)$	0	P
PtP0.42	Control word of segment 21	-	0–0x7FFFFFFF	0x00000000	P
PtP0.43	Position of segment 21	reference unit	$-(2^{31}-1)$–$(2^{31}-1)$	0	P
PtP0.44	Control word of segment 22	-	0–0x7FFFFFFF	0x00000000	P
PtP0.45	Position of segment 22	reference unit	$-(2^{31}-1)$–$(2^{31}-1)$	0	P
PtP0.46	Control word of segment 23	-	0–0x7FFFFFFF	0x00000000	P
PtP0.47	Position of segment 23	reference unit	$-(2^{31}-1)$–$(2^{31}-1)$	0	P
PtP0.48	Control word of segment 24	-	0–0x7FFFFFFF	0x00000000	P
PtP0.49	Position of segment 24	reference unit	$-(2^{31}-1)$–$(2^{31}-1)$	0	P
PtP0.50	Control word of segment 25	-	0–0x7FFFFFFF	0x00000000	P
PtP0.51	Position of segment 25	reference unit	$-(2^{31}-1)$–$(2^{31}-1)$	0	P
PtP0.52	Control word of segment 26	-	0–0x7FFFFFFF	0x00000000	P
PtP0.53	Position of segment 26	reference unit	$-(2^{31}-1)$–$(2^{31}-1)$	0	P
PtP0.54	Control word of segment 27	-	0–0x7FFFFFFF	0x00000000	P
PtP0.55	Position of segment 27	reference unit	$-(2^{31}-1)$–$(2^{31}-1)$	0	P
PtP0.56	Control word of segment 28	-	0–0x7FFFFFFF	0x00000000	P
PtP0.57	Position of segment 28	reference unit	$-(2^{31}-1)$–$(2^{31}-1)$	0	P

برق موشن
BARGH MOTION

Function code	Name	Unit	Range	Default	Applicable mode
PtP0.58	Control word of segment 29	-	0–0x7FFFFFFF	0x00000000	P
PtP0.59	Position of segment 29	reference unit	$-(2^{31}-1)$–$(2^{31}-1)$	0	P
PtP0.60	Control word of segment 30	-	0–0x7FFFFFFF	0x00000000	P
PtP0.61	Position of segment 30	reference unit	$-(2^{31}-1)$–$(2^{31}-1)$	0	P
PtP0.62	Control word of segment 31	-	0–0x7FFFFFFF	0x00000000	P
PtP0.63	Position of segment 31	reference unit	$-(2^{31}-1)$–$(2^{31}-1)$	0	P
PtP0.64	Control word of segment 32	-	0–0x7FFFFFFF	0x00000000	P
PtP0.65	Position of segment 32	reference unit	$-(2^{31}-1)$–$(2^{31}-1)$	0	P
PtP0.66	Control word of segment 33	-	0–0x7FFFFFFF	0x00000000	P
PtP0.67	Position of segment 33	reference unit	$-(2^{31}-1)$–$(2^{31}-1)$	0	P
PtP0.68	Control word of segment 34	-	0–0x7FFFFFFF	0x00000000	P
PtP0.69	Position of segment 34	reference unit	$-(2^{31}-1)$–$(2^{31}-1)$	0	P
PtP0.70	Control word of segment 35	-	0–0x7FFFFFFF	0x00000000	P
PtP0.71	Position of segment 35	reference unit	$-(2^{31}-1)$–$(2^{31}-1)$	0	P
PtP0.72	Control word of segment 36	-	0–0x7FFFFFFF	0x00000000	P
PtP0.73	Position of segment 36	reference unit	$-(2^{31}-1)$–$(2^{31}-1)$	0	P
PtP0.74	Control word of segment 37	-	0–0x7FFFFFFF	0x00000000	P

برق موشن
BARGH MOTION

Function code	Name	Unit	Range	Default	Applicable mode
PtP0.75	Position of segment 37	reference unit	$-(2^{31}-1)$–$(2^{31}-1)$	0	P
PtP0.76	Control word of segment 38	-	0–0x7FFFFFFF	0x00000000	P
PtP0.77	Position of segment 38	reference unit	$-(2^{31}-1)$–$(2^{31}-1)$	0	P
PtP0.78	Control word of segment 39	-	0–0x7FFFFFFF	0x00000000	P
PtP0.79	Position of segment 39	reference unit	$-(2^{31}-1)$–$(2^{31}-1)$	0	P
PtP0.80	Control word of segment 40	-	0–0x7FFFFFFF	0x00000000	P
PtP0.81	Position of segment 40	reference unit	$-(2^{31}-1)$–$(2^{31}-1)$	0	P
PtP0.82	Control word of segment 41	-	0–0x7FFFFFFF	0x00000000	P
PtP0.83	Position of segment 41	reference unit	$-(2^{31}-1)$–$(2^{31}-1)$	0	P
PtP0.84	Control word of segment 42	-	0–0x7FFFFFFF	0x00000000	P
PtP0.85	Position of segment 42	reference unit	$-(2^{31}-1)$–$(2^{31}-1)$	0	P
PtP0.86	Control word of segment 43	-	0–0x7FFFFFFF	0x00000000	P
PtP0.87	Position of segment 43	reference unit	$-(2^{31}-1)$–$(2^{31}-1)$	0	P
PtP0.88	Control word of segment 44	-	0–0x7FFFFFFF	0x00000000	P
PtP0.89	Position of segment 44	reference unit	$-(2^{31}-1)$–$(2^{31}-1)$	0	P
PtP0.90	Control word of segment 45	-	0–0x7FFFFFFF	0x00000000	P
PtP0.91	Position of segment 45	reference unit	$-(2^{31}-1)$–$(2^{31}-1)$	0	P

BARGH MOTION

Function code	Name	Unit	Range	Default	Applicable mode
PtP0.92	Control word of segment 46	-	0–0x7FFFFFFF	0x00000000	P
PtP0.93	Position of segment 46	reference unit	$-(2^{31}-1)$–$(2^{31}-1)$	0	P
PtP0.94	Control word of segment 47	-	0–0x7FFFFFFF	0x00000000	P
PtP0.95	Position of segment 47	reference unit	$-(2^{31}-1)$–$(2^{31}-1)$	0	P
PtP0.96	Control word of segment 48	-	0–0x7FFFFFFF	0x00000000	P
PtP0.97	Position of segment 48	reference unit	$-(2^{31}-1)$–$(2^{31}-1)$	0	P
PtP0.98	Control word of segment 49	-	0–0x7FFFFFFF	0x00000000	P
PtP0.99	Position of segment 49	reference unit	$-(2^{31}-1)$–$(2^{31}-1)$	0	P
PtP1 PTP control					
PtP1.00	Control word of segment 50	-	0–0x7FFFFFFF	0x00000000	P
PtP1.01	Position of segment 50	reference unit	$-(2^{31}-1)$–$(2^{31}-1)$	0	P
PtP1.02	Control word of segment 51	-	0–0x7FFFFFFF	0x00000000	P
PtP1.03	Position of segment 51	reference unit	$-(2^{31}-1)$–$(2^{31}-1)$	0	P
PtP1.04	Control word of segment 52	-	0–0x7FFFFFFF	0x00000000	P
PtP1.05	Position of segment 52	reference unit	$-(2^{31}-1)$–$(2^{31}-1)$	0	P
PtP1.06	Control word of segment 53	-	0–0x7FFFFFFF	0x00000000	P
PtP1.07	Position of segment 53	reference unit	$-(2^{31}-1)$–$(2^{31}-1)$	0	P

برق موشن
BARGH MOTION

Function code	Name	Unit	Range	Default	Applicable mode
PtP1.08	Control word of segment 54	-	0–0x7FFFFFFF	0x00000000	P
PtP1.09	Position of segment 54	reference unit	$-(2^{31}-1)$–$(2^{31}-1)$	0	P
PtP1.10	Control word of segment 55	-	0–0x7FFFFFFF	0x00000000	P
PtP1.11	Position of segment 55	reference unit	$-(2^{31}-1)$–$(2^{31}-1)$	0	P
PtP1.12	Control word of segment 56	-	0–0x7FFFFFFF	0x00000000	P
PtP1.13	Position of segment 56	reference unit	$-(2^{31}-1)$–$(2^{31}-1)$	0	P
PtP1.14	Control word of segment 57	-	0–0x7FFFFFFF	0x00000000	P
PtP1.15	Position of segment 57	reference unit	$-(2^{31}-1)$–$(2^{31}-1)$	0	P
PtP1.16	Control word of segment 58	-	0–0x7FFFFFFF	0x00000000	P
PtP1.17	Position of segment 58	reference unit	$-(2^{31}-1)$–$(2^{31}-1)$	0	P
PtP1.18	Control word of segment 59	-	0–0x7FFFFFFF	0x00000000	P
PtP1.19	Position of segment 59	reference unit	$-(2^{31}-1)$–$(2^{31}-1)$	0	P
PtP1.20	Control word of segment 60	-	0–0x7FFFFFFF	0x00000000	P
PtP1.21	Position of segment 60	reference unit	$-(2^{31}-1)$–$(2^{31}-1)$	0	P
PtP1.22	Control word of segment 61	-	0–0x7FFFFFFF	0x00000000	P
PtP1.23	Position of segment 61	reference unit	$-(2^{31}-1)$–$(2^{31}-1)$	0	P
PtP1.24	Control word of segment 62	-	0–0x7FFFFFFF	0x00000000	P

Function code	Name	Unit	Range	Default	Applicable mode
PtP1.25	Position of segment 62	reference unit	$-(2^{31}-1)$–$(2^{31}-1)$	0	P
PtP1.26	Control word of segment 63	-	0–0x7FFFFFFF	0x00000000	P
PtP1.27	Position of segment 63	reference unit	$-(2^{31}-1)$–$(2^{31}-1)$	0	P
PtP1.28	Control word of segment 64	-	0–0x7FFFFFFF	0x00000000	P
PtP1.29	Position of segment 64	reference unit	$-(2^{31}-1)$–$(2^{31}-1)$	0	P
PtP1.30	Control word of segment 65	-	0–0x7FFFFFFF	0x00000000	P
PtP1.31	Position of segment 65	reference unit	$-(2^{31}-1)$–$(2^{31}-1)$	0	P
PtP1.32	Control word of segment 66	-	0–0x7FFFFFFF	0x00000000	P
PtP1.33	Position of segment 66	reference unit	$-(2^{31}-1)$–$(2^{31}-1)$	0	P
PtP1.34	Control word of segment 67	-	0–0x7FFFFFFF	0x00000000	P
PtP1.35	Position of segment 67	reference unit	$-(2^{31}-1)$–$(2^{31}-1)$	0	P
PtP1.36	Control word of segment 68	-	0–0x7FFFFFFF	0x00000000	P
PtP1.37	Position of segment 68	reference unit	$-(2^{31}-1)$–$(2^{31}-1)$	0	P
PtP1.38	Control word of segment 69	-	0–0x7FFFFFFF	0x00000000	P
PtP1.39	Position of segment 69	reference unit	$-(2^{31}-1)$–$(2^{31}-1)$	0	P
PtP1.40	Control word of segment 70	-	0–0x7FFFFFFF	0x00000000	P
PtP1.41	Position of segment 70	reference unit	$-(2^{31}-1)$–$(2^{31}-1)$	0	P

BARGH MOTION

Function code	Name	Unit	Range	Default	Applicable mode
PtP1.42	Control word of segment 71	-	0–0x7FFFFFFF	0x00000000	P
PtP1.43	Position of segment 71	reference unit	$-(2^{31}-1)$–$(2^{31}-1)$	0	P
PtP1.44	Control word of segment 72	-	0–0x7FFFFFFF	0x00000000	P
PtP1.45	Position of segment 72	reference unit	$-(2^{31}-1)$–$(2^{31}-1)$	0	P
PtP1.46	Control word of segment 73	-	0–0x7FFFFFFF	0x00000000	P
PtP1.47	Position of segment 73	reference unit	$-(2^{31}-1)$–$(2^{31}-1)$	0	P
PtP1.48	Control word of segment 74	-	0–0x7FFFFFFF	0x00000000	P
PtP1.49	Position of segment 74	reference unit	$-(2^{31}-1)$–$(2^{31}-1)$	0	P
PtP1.50	Control word of segment 75	-	0–0x7FFFFFFF	0x00000000	P
PtP1.51	Position of segment 75	reference unit	$-(2^{31}-1)$–$(2^{31}-1)$	0	P
PtP1.52	Control word of segment 76	-	0–0x7FFFFFFF	0x00000000	P
PtP1.53	Position of segment 76	reference unit	$-(2^{31}-1)$–$(2^{31}-1)$	0	P
PtP1.54	Control word of segment 77	-	0–0x7FFFFFFF	0x00000000	P
PtP1.55	Position of segment 77	reference unit	$-(2^{31}-1)$–$(2^{31}-1)$	0	P
PtP1.56	Control word of segment 78	-	0–0x7FFFFFFF	0x00000000	P
PtP1.57	Position of segment 78	reference unit	$-(2^{31}-1)$–$(2^{31}-1)$	0	P
PtP1.58	Control word of segment 79	-	0–0x7FFFFFFF	0x00000000	P

Function code	Name	Unit	Range	Default	Applicable mode
PtP1.59	Position of segment 79	reference unit	$-(2^{31}-1)$–$(2^{31}-1)$	0	P
PtP1.60	Control word of segment 80	-	0–0x7FFFFFFF	0x00000000	P
PtP1.61	Position of segment 80	reference unit	$-(2^{31}-1)$–$(2^{31}-1)$	0	P
PtP1.62	Control word of segment 81	-	0–0x7FFFFFFF	0x00000000	P
PtP1.63	Position of segment 81	reference unit	$-(2^{31}-1)$–$(2^{31}-1)$	0	P
PtP1.64	Control word of segment 82	-	0–0x7FFFFFFF	0x00000000	P
PtP1.65	Position of segment 82	reference unit	$-(2^{31}-1)$–$(2^{31}-1)$	0	P
PtP1.66	Control word of segment 83	-	0–0x7FFFFFFF	0x00000000	P
PtP1.67	Position of segment 83	reference unit	$-(2^{31}-1)$–$(2^{31}-1)$	0	P
PtP1.68	Control word of segment 84	-	0–0x7FFFFFFF	0x00000000	P
PtP1.69	Position of segment 84	reference unit	$-(2^{31}-1)$–$(2^{31}-1)$	0	P
PtP1.70	Control word of segment 85	-	0–0x7FFFFFFF	0x00000000	P
PtP1.71	Position of segment 85	reference unit	$-(2^{31}-1)$–$(2^{31}-1)$	0	P
PtP1.72	Control word of segment 86	-	0–0x7FFFFFFF	0x00000000	P
PtP1.73	Position of segment 86	reference unit	$-(2^{31}-1)$–$(2^{31}-1)$	0	P
PtP1.74	Control word of segment 87	-	0–0x7FFFFFFF	0x00000000	P
PtP1.75	Position of segment 87	reference unit	$-(2^{31}-1)$–$(2^{31}-1)$	0	P

برق موشن
BARGH MOTION

Function code	Name	Unit	Range	Default	Applicable mode
PtP1.76	Control word of segment 88	-	0–0x7FFFFFFF	0x00000000	P
PtP1.77	Position of segment 88	reference unit	$-(2^{31}-1)$–$(2^{31}-1)$	0	P
PtP1.78	Control word of segment 89	-	0–0x7FFFFFFF	0x00000000	P
PtP1.79	Position of segment 89	reference unit	$-(2^{31}-1)$–$(2^{31}-1)$	0	P
PtP1.80	Control word of segment 90	-	0–0x7FFFFFFF	0x00000000	P
PtP1.81	Position of segment 90	reference unit	$-(2^{31}-1)$–$(2^{31}-1)$	0	P
PtP1.82	Control word of segment 91	-	0–0x7FFFFFFF	0x00000000	P
PtP1.83	Position of segment 91	reference unit	$-(2^{31}-1)$–$(2^{31}-1)$	0	P
PtP1.84	Control word of segment 92	-	0–0x7FFFFFFF	0x00000000	P
PtP1.85	Position of segment 92	reference unit	$-(2^{31}-1)$–$(2^{31}-1)$	0	P
PtP1.86	Control word of segment 93	-	0–0x7FFFFFFF	0x00000000	P
PtP1.87	Position of segment 93	reference unit	$-(2^{31}-1)$–$(2^{31}-1)$	0	P
PtP1.88	Control word of segment 94	-	0–0x7FFFFFFF	0x00000000	P
PtP1.89	Position of segment 94	reference unit	$-(2^{31}-1)$–$(2^{31}-1)$	0	P
PtP1.90	Control word of segment 95	-	0–0x7FFFFFFF	0x00000000	P
PtP1.91	Position of segment 95	reference unit	$-(2^{31}-1)$–$(2^{31}-1)$	0	P
PtP1.92	Control word of segment 96	-	0–0x7FFFFFFF	0x00000000	P

برق
BARGH MOTION

Function code	Name	Unit	Range	Default	Applicable mode
PtP1.93	Position of segment 96	reference unit	$-(2^{31}-1)$–$(2^{31}-1)$	0	P
PtP1.94	Control word of segment 97	-	0–0x7FFFFFFF	0x00000000	P
PtP1.95	Position of segment 97	reference unit	$-(2^{31}-1)$–$(2^{31}-1)$	0	P
PtP1.96	Control word of segment 98	-	0–0x7FFFFFFF	0x00000000	P
PtP1.97	Position of segment 98	reference unit	$-(2^{31}-1)$–$(2^{31}-1)$	0	P
PtP1.98	Control word of segment 99	-	0–0x7FFFFFFF	0x00000000	P
PtP1.99	Position of segment 99	reference unit	$-(2^{31}-1)$–$(2^{31}-1)$	0	P
PtP2 PTP control					
PtP2.00	Control word of segment 100	-	0–0x7FFFFFFF	0x00000000	P
PtP2.01	Position of segment 100	reference unit	$-(2^{31}-1)$–$(2^{31}-1)$	0	P
PtP2.02	Control word of segment 101	-	0–0x7FFFFFFF	0x00000000	P
PtP2.03	Position of segment 101	reference unit	$-(2^{31}-1)$–$(2^{31}-1)$	0	P
PtP2.04	Control word of segment 102	-	0–0x7FFFFFFF	0x00000000	P
PtP2.05	Position of segment 102	reference unit	$-(2^{31}-1)$–$(2^{31}-1)$	0	P
PtP2.06	Control word of segment 103	-	0–0x7FFFFFFF	0x00000000	P
PtP2.07	Position of segment 103	reference unit	$-(2^{31}-1)$–$(2^{31}-1)$	0	P
PtP2.08	Control word of segment 104	-	0–0x7FFFFFFF	0x00000000	P
PtP2.09	Position of	reference	$-(2^{31}-1)$–$(2^{31}-1)$	0	P

BARGH MOTION

Function code	Name	Unit	Range	Default	Applicable mode
	segment 104	unit			
PtP2.10	Control word of segment 105	-	0–0x7FFFFFFF	0x00000000	P
PtP2.11	Position of segment 105	reference unit	$-(2^{31}-1)$–$(2^{31}-1)$	0	P
PtP2.12	Control word of segment 106	-	0–0x7FFFFFFF	0x00000000	P
PtP2.13	Position of segment 106	reference unit	$-(2^{31}-1)$–$(2^{31}-1)$	0	P
PtP2.14	Control word of segment 107	-	0–0x7FFFFFFF	0x00000000	P
PtP2.15	Position of segment 107	reference unit	$-(2^{31}-1)$–$(2^{31}-1)$	0	P
PtP2.16	Control word of segment 108	-	0–0x7FFFFFFF	0x00000000	P
PtP2.17	Position of segment 108	reference unit	$-(2^{31}-1)$–$(2^{31}-1)$	0	P
PtP2.18	Control word of segment 109	-	0–0x7FFFFFFF	0x00000000	P
PtP2.19	Position of segment 109	reference unit	$-(2^{31}-1)$–$(2^{31}-1)$	0	P
PtP2.20	Control word of segment 110	-	0–0x7FFFFFFF	0x00000000	P
PtP2.21	Position of segment 110	reference unit	$-(2^{31}-1)$–$(2^{31}-1)$	0	P
PtP2.22	Control word of segment 111	-	0–0x7FFFFFFF	0x00000000	P
PtP2.23	Position of segment 111	reference unit	$-(2^{31}-1)$–$(2^{31}-1)$	0	P
PtP2.24	Control word of segment 112	-	0–0x7FFFFFFF	0x00000000	P
PtP2.25	Position of segment 112	reference unit	$-(2^{31}-1)$–$(2^{31}-1)$	0	P
PtP2.26	Control word of	-	0–0x7FFFFFFF	0x00000000	P

Function code	Name	Unit	Range	Default	Applicable mode
	segment 113				
PtP2.27	Position of segment 113	reference unit	$-(2^{31}-1)$–$(2^{31}-1)$	0	P
PtP2.28	Control word of segment 114	-	0–0x7FFFFFFF	0x00000000	P
PtP2.29	Position of segment 114	reference unit	$-(2^{31}-1)$–$(2^{31}-1)$	0	P
PtP2.30	Control word of segment 115	-	0–0x7FFFFFFF	0x00000000	P
PtP2.31	Position of segment 115	reference unit	$-(2^{31}-1)$–$(2^{31}-1)$	0	P
PtP2.32	Control word of segment 116	-	0–0x7FFFFFFF	0x00000000	P
PtP2.33	Position of segment 116	reference unit	$-(2^{31}-1)$–$(2^{31}-1)$	0	P
PtP2.34	Control word of segment 117	-	0–0x7FFFFFFF	0x00000000	P
PtP2.35	Position of segment 117	reference unit	$-(2^{31}-1)$–$(2^{31}-1)$	0	P
PtP2.36	Control word of segment 118	-	0–0x7FFFFFFF	0x00000000	P
PtP2.37	Position of segment 118	reference unit	$-(2^{31}-1)$–$(2^{31}-1)$	0	P
PtP2.38	Control word of segment 119	-	0–0x7FFFFFFF	0x00000000	P
PtP2.39	Position of segment 119	reference unit	$-(2^{31}-1)$–$(2^{31}-1)$	0	P
PtP2.40	Control word of segment 120	-	0–0x7FFFFFFF	0x00000000	P
PtP2.41	Position of segment 120	reference unit	$-(2^{31}-1)$–$(2^{31}-1)$	0	P
PtP2.42	Control word of segment 121	-	0–0x7FFFFFFF	0x00000000	P
PtP2.43	Position of	reference	$-(2^{31}-1)$–$(2^{31}-1)$	0	P

Function code	Name	Unit	Range	Default	Applicable mode
	segment 121	unit			
PtP2.44	Control word of segment 122	-	0–0x7FFFFFFF	0x00000000	P
PtP2.45	Position of segment 122	reference unit	$-(2^{31}-1)$–$(2^{31}-1)$	0	P
PtP2.46	Control word of segment 123	-	0–0x7FFFFFFF	0x00000000	P
PtP2.47	Position of segment 123	reference unit	$-(2^{31}-1)$–$(2^{31}-1)$	0	P
PtP2.48	Control word of segment 124	-	0–0x7FFFFFFF	0x00000000	P
PtP2.49	Position of segment 124	reference unit	$-(2^{31}-1)$–$(2^{31}-1)$	0	P
PtP2.50	Control word of segment 125	-	$-(2^{31}-1)$–$(2^{31}-1)$	0x00000000	P
PtP2.51	Position of segment 125	reference unit	$-(2^{31}-1)$–$(2^{31}-1)$	0	P
PtP2.52	Control word of segment 126	-	0–0x7FFFFFFF	0x00000000	P
PtP2.53	Position of segment 126	reference unit	$-(2^{31}-1)$–$(2^{31}-1)$	0	P
PtP2.54	Control word of segment 127	-	0–0x7FFFFFFF	0x00000000	P
PtP2.55	Position of segment 127	reference unit	$-(2^{31}-1)$–$(2^{31}-1)$	0	P

10.2 Monitoring parameter list

The following table lists the parameters for monitoring servo drive state.

Function code	Name	Unit	Range	Applicable mode
R0 System monitoring				
R0.00	Motor rotation speed	r/min	-9999.9–9999.9	PST
R0.01	Speed command	r/min	-9999.9–9999.9	PST
R0.02	Accumulated feedback pulses	reference unit	$-(2^{63}-1)$–$(2^{63}-1)$	P
R0.03	Accumulated command pulses	reference unit	$-(2^{63}-1)$–$(2^{63}-1)$	P
R0.04	Residual pulses	reference unit	$-(2^{31}-1)$–$(2^{31}-1)$	P
R0.05	Hybrid control deviation	reference unit	$-(2^{3}-1)$–$(2^{31}-1)$	P
R0.06	Current torque	%	-500.0–500.0	PST
R0.07	Main circuit DC voltage	V	0.0–1000.0	PST
R0.09	Output voltage	Vrms	0.0–1000.0	PST
R0.10	Output current	Arms	0.00–1000.00	PST
R0.11	Drive temperature	°C	-55.0–180.0	PST
R0.12	Torque limit	%	-500.0–500.0	PST
R0.13	Encoder feedback value	pulse	0–$(2^{32}-1)$	PST
R0.14	Rotor position relative to Z pulse	pulse	0–$(2^{31}-1)$	PST
R0.15	Load inertia ratio	%	0–10000	PST
R0.16	Output power	%	-500.0–500.0	PST
R0.17	Motor load ratio	%	0–500	PST
R0.18	Numerator of actual electronic gear ratio	-	0–$(2^{31}-1)$	P
R0.19	Denominator of actual electronic gear ratio	-	1–$(2^{31}-1)$	P
R0.20	Position command speed	r/min	-9999.9–9999.9	P
R0.21	Motor speed (filtering)	r/min	-9999.9–9999.9	PST
R0.22	PTP state	-	-1–4223	P
R0.23	Encoder absolute position feedback	pulse	$-(2^{31}-1)$–$(2^{31}-1)$	PST
R0.24	Encoder EEPROM data state	-	0–3	PST
R0.25	Turns of multiturn encoder	-	-32768–32767	PST
R0.26	Available encoder type	-	0–6	PST
R0.27	EtherCAT clock synchronous	-	0–1	PST

برق موشن
BARGH MOTION

Function code	Name	Unit	Range	Applicable mode
	correction state			
R0.28	State of CANopen state machine	-	0–18	PST
R0.30	System state	-	0–6	PST
R0.31	IGBT status	-	0–1	PST
R0.32	Current mode	-	0–2	PST
R0.33	Power-on time	s	0–(2^{31}-1)	PST
R0.34	Running time	s	0–(2^{31}-1)	PST
R0.35	DSP software version	-	0.00–10.00	PST
R0.36	FPGA software version	-	0.00–10.00	PST
R0.38	Drive SN 1	-	0–65535	PST
R0.39	Drive SN 2	-	0–65535	PST
R0.40	Drive SN 3	-	0–65535	PST
R0.41	Drive SN 4	-	0–65535	PST
R0.42	Drive SN 5	-	0–65535	PST
R0.43	Drive SN 6	-	0–65535	PST
R0.44	Absolute position of linear encoder (2nd encoder) in single circle	pulse	0–(2^{31}-1)	PST
R0.45	Speed feedback of 2nd encoder	r/min	-9999.9–9999.9	PST
R0.46	Detected speed of speed observer	r/min	-9999.9–9999.9	PST
R0.47	Feedback speed of speed observer	r/min	-9999.9–9999.9	PST
R0.48	Observing disturbance torque of disturbance observer	%	-1000.0–1000.0	PST
R0.49	Compensation value of fully-closed-loop vibration suppressor	r/min	-9999.9–9999.9	PST
R0.51	Observe load inertia ratio in real time	%	0–10000	PST
R0.52	Accumulated linear encoder (2nd encoder) position feedback (32-bit)	pulse	-(2^{31}-1)–(2^{31}-1)	PST
R0.53	Gantry synchronization position deviation	reference unit	-(2^{31}-1)–(2^{31}-1)	PST
R0.54	Linear encoder (2nd encoder) position feedback value	pulse	0–(2^{31}-1)	PST
R0.55	Encoder turn deviation after multiturn position cleared	-	-(2^{31}-1)–(2^{31}-1)	PST
R0.56	Encoder feedback deviation after	pulse	-(2^{31}-1)–(2^{31}-1)	PST

برق موشن
BARGH MOTION

Function code	Name	Unit	Range	Applicable mode
	multiturn position cleared			
R0.57	Accumulated linear encoder (2nd encoder) position feedback (64-bit)	pulse	-(2^{63}-1)–(2^{63}-1)	PST
R0.58	Position inside the single-turn of the disk	pulse	-(2^{31}-1)–(2^{31}-1)	PST
R0.60	Medium-power motor temperature	°C	-55–200	PST
R0.99	Fault code	-	-32768–32767	PST
R1 I/O monitoring				
R1.00	Digital input state	-	0x000–0x3FF	PST
R1.01	Digital output state	-	0x00–0x3F	PST
R1.02	Original voltage of analog input 1	V	-10.000–10.000	PST
R1.03	Original voltage of analog input 2	V	-10.000–10.000	PST
R1.05	Voltage of analog input 1	V	-10.000–10.000	PST
R1.06	Voltage of analog input 2	V	-10.000–10.000	PST
R1.08	Voltage of analog output 1	V	-10.000–10.000	PST
R1.09	Voltage of analog output 2	V	-10.000–10.000	PST
R1.11	Accumulated input pulses	reference unit	-(2^{31}-1)–(2^{31}-1)	PST
R1.12	Pulse position command	reference unit	-(2^{31}-1)–(2^{31}-1)	PST
R1.13	Pulse speed command	r/min	-10000.0–10000.0	PST
R1.14	Analog compensation speed	r/min	-10000.0–10000.0	PST
R1.15	Analog compensation torque	%	-1000.0–1000.0	PST
R1.16	DI-captured encoder value	pulse	-(2^{31}-1)–(2^{31}-1)	PST
R1.17	Display of drive state bit	-	0–0xFFFF	PST
R3 Fault recording				
R3.00	Fault code record	-	-	**PST**
R3.01	Power-on time when fault occurs	h	0–(2^{31}-1)	PST
R3.02	Running time when fault occurs	h	0–(2^{31}-1)	PST
R3.03	Motor speed when fault occurs	r/min	-20000–20000	PST
R3.04	Speed command when fault occurs	r/min	-20000–20000	PST
R3.05	Feedback pulse accumulation when fault occurs	reference unit	-(2^{31}-1)–(2^{31}-1)	P
R3.06	Command pulse accumulation when fault occurs	reference unit	-(2^{31}-1)–(2^{31}-1)	P
R3.07	Residual pulses when fault occurs	reference unit	-(2^{31}-1)–(2^{31}-1)	P

Function code	Name	Unit	Range	Applicable mode
R3.08	Current torque when fault occurs	%	-500.0–500.0	PST
R3.09	Main circuit DC voltage when fault occurs	V	0.0–1000.0	PST
R3.10	Output voltage when fault occurs	Vrms	0.0–1000.0	PST
R3.11	Output current when fault occurs	Arms	0.00–1000.00	PST
R3.20	Last fault code	-	-	PST
R3.21	2nd-last fault code	-	-	PST
R3.22	3rd-last fault code	-	-	PST
R3.23	4th-last fault code	-	-	PST
R3.24	5th-last fault code	-	-	PST
R3.25	6th-last fault code	-	-	PST
R3.26	7th-last fault code	-	-	PST
R3.27	8th-last fault code	-	-	PST
R3.28	9th-last fault code	-	-	PST
R3.29	10th-last fault code	-	-	PST

10.3 Common monitoring parameters

Set value of P0.15	Meaning	Display	Unit	Corresponding parameter
[0]	Motor rotation speed	SPdFb	r/min	R0.00
1	Speed command	SPdcMd	r/min	R0.01
2	Pulse feedback accumulation	PLSFb	reference unit	R0.02
3	Pulse command accumulation	PLScMd	reference unit	R0.03
4	Residual pulses	PLSEr1	reference unit	R0.04
5	Hybrid control deviation	PLSEr2	reference unit	R0.05
6	Current torque	trqFb	%	R0.06
7	Main circuit DC voltage	UbUS1	V	R0.07
8	Output voltage	UoUt	Vrms	R0.09
9	Output current	IoUt	Arms	R0.10
10	Drive temperature	MdLtMP	°C	R0.11
11	Torque limit	trqLMt	%	R0.12
12	Encoder feedback value	EncFb	pulse	R0.13
13	Rotor position relative to Z pulse	EncAbS	pulse	R0.14
14	Load inertia ratio	J-r	%	R0.15
15	Output power	PoWEr	%	R0.16
16	Motor load ratio	LoAd-r	%	R0.17
17	Numerator of actual electronic gear ratio	nUM	-	R0.18
18	Denominator of actual electronic gear ratio	dEn	-	R0.19
19	Pulse speed command	PLSSPd	r/min	R0.20
20	Instant speed	SPdFb1	r/min	R0.21
21	PTP state	PtPSts	-	R0.22

10.4 Fault codes

A fault code is displayed in the format of ErXX-X, in which XX indicates the main code and X indicates the sub code.

For example, in , 01 indicates the main code and 0 indicates the sub code. Other codes are displayed in the similar way.

Fault code	Name	Attribute		
		History record	Can be cleared	Disable
Er01-0	IGBT fault	●		●
Er01-1	Braking pipe fault (7.5kW and above models)	●		●
Er01-2	U-phase IGBT fault	●		●
Er01-3	V-phase IGBT fault	●		●
Er01-4	W-phase IGBT fault	●		●
Er01-5	IPM fault	●		●
Er02-0	Encoder fault–Encoder disconnection	●		●
Er02-1	Encoder fault–Encoder feedback deviation too large	●		●
Er02-2	Encoder fault– Parity error	●		●
Er02-3	Encoder fault–CRC error	●		●
Er02-4	Encoder fault–Frame error	●		●
Er02-5	Encoder fault–Short frame error	●		●
Er02-6	Encoder fault–Encoder timeout	●		●
Er02-7	Encoder fault–2nd encoder timeout	●		●
Er02-8	Encoder fault–Encoder battery low-voltage alarm			
Er02-9	Encoder fault–Encoder battery undervoltage fault	●		●
Er02-a	Encoder fault–Encoder overheating	●		●
Er02-b	Encoder fault–Encoder EEPROM writing error	●		●
Er02-c	Encoder fault–No data in encoder EEPROM			●

Fault code	Name	Attribute		
		History record	Can be cleared	Disable
Er02-d	Encoder fault–Encoder EEPROM data check error			●
Er02-e	Encoder fault–Encoder identification error			●
Er02-f	Encoder fault–Failed to write the encoder offset angle			●
Er03-0	Current sensor fault–Phase-U current sensor fault	●		●
Er03-1	Current sensor fault–Phase-V current sensor fault	●		●
Er03-2	Current sensor fault–Phase-W current sensor fault	●		●
Er04-0	System initialization fault			●
Er05-0	Setting fault–Motor model not exist	●		●
Er05-1	Setting fault–Motor model not exist	●		●
Er05-2	Setting fault–Motor and drive model not match	●		●
Er05-3	Setting fault–Incorrect software limits	●	●	●
Er05-4	Setting fault–Incorrect homing mode	●	●	●
Er05-5	Setting fault–PTP-control travel overflow	●	●	●
Er05-6	Setting fault–Power module setting error	●	●	●
Er06-0	Brake fault	●	●	●
Er07-0	Regenerative discharge overload fault	●	●	●
Er08-0	AI overvoltage fault–AI 1	●	●	●
Er08-1	AI overvoltage fault–AI 2	●	●	●
Er09-0	EEPROM fault–Read/write error			●
Er09-1	EEPROM fault–Data check error			●
Er10-0	Hardware fault–FPGA fault	●		●
Er10-1	Hardware fault–Communication card fault	●	●	●
Er10-2	Hardware fault–To-ground short circuit fault	●		●
Er10-3	Hardware fault–External input fault	●	●	●

Fault code	Name	Attribute		
		History record	Can be cleared	Disable
Er10-4	Hardware fault–Emergency stop fault	●	●	●
Er10-5	Hardware fault–485 communication fault	●	●	●
Er10-6	Hardware fault–AC power phase loss	●	●	●
Er10-7	Hardware fault–Fan fault	●	●	●
Er10-8	Hardware fault–Regenerative transistor fault	●	●	●
Er10-9	Hardware fault–STO phase loss	●	●	●
Er10-a	Hardware fault–STO DPIN1 fault	●	●	●
Er10-b	Hardware fault–STO DPIN2 fault	●	●	●
Er11-0	Software fault–Motor control task re-entry	●		●
Er11-1	Software fault–Periodic task re-entry	●		●
Er11-2	Software fault–Illegal operation	●		●
Er12-0	I/O fault–Duplicate DI assignment	●	●	●
Er12-1	I/O fault–Duplicate AI assignment	●	●	●
Er12-2	I/O fault–Pulse input frequency too high	●	●	●
Er13-0	Main circuit overvoltage fault	●	●	●
Er13-1	Main circuit undervoltage fault		●	●
Er14-0	Control power undervoltage fault		●	●
Er17-0	Drive overload fault	●		●
Er17-1	Drive overload fault 2	●		●
Er18-0	Motor overload fault	●	●	●
Er18-1	Motor overtemperature fault	●	●	●
Er18-2	Motor phase loss fault 1	●		●
Er18-3	Motor phase loss fault 2	●		●
Er19-0	Speed fault–Overspeed fault	●	●	●
Er19-1	Speed fault–FWD overspeed fault	●	●	●
Er19-2	Speed fault–REV overspeed fault	●	●	●
Er19-3	Speed fault–Incorrect overspeed parameter setting	●	●	●
Er19-4	Speed fault–Out-of-control fault	●	●	●
Er20-0	Speed out-of-tolerance-range fault	●	●	●

Fault code	Name	Attribute		
		History record	Can be cleared	Disable
Er21-0	Position overtravel - FWD overtravel		●	
Er21-1	Position overtravel - REV overtravel		●	
Er22-0	Position out-of-tolerance fault	●	●	●
Er22-1	Hybrid control deviation too large	●	●	●
Er22-2	Position increment overflow fault	●		●
Er22-3	CANopen fault–Synchronization signal timeout	●	●	●
Er22-4	CANopen fault–Full position command buffer	●	●	●
Er23-0	Drive overtemperature fault	●	●	●
Er24-0	Communication fault-PWK parameter ID error		●	
Er24-1	Communication fault-PWK parameter out-of-range		●	
Er24-2	Communication fault-Read-only PWK parameter		●	
Er24-3	Communication fault-PZD setting parameter does not exist		●	
Er24-4	Communication fault-PZD setting parameter property does not match		●	
Er24-8	EtherCAT fault-Initialization fault	●		●
Er24-9	EtherCAT fault-EEPROM fault	●		●
Er24-a	EtherCAT fault-DC Sync0 signal exception	●	●	●
Er24-b	EtherCAT fault-Disconnection fault	●	●	●
Er24-c	EtherCAT fault-PDO data loss fault	●	●	●
Er25-2	Application fault–Phase sequence detection timeout	●	●	●
Er25-3	Application fault–Phase sequence detection failed	●	●	●
Er25-4	Application fault–Encoder offset angle test timeout	●	●	●
Er25-5	Application fault–Encoder offset angle	●	●	●

Fault code	Name	Attribute		
		History record	Can be cleared	Disable
	test failed			
Er25-6	Application fault–Homing offside	●	●	●
Er25-7	Application fault–Inertia identifying failed	●	●	●
Er25-8	Application fault–Magnetic pole detection failed	●	●	●
Er25-9	Application fault–Overtravel/overspeed in confirmation of magnetic pole detection	●	●	●
Er25-a	Application fault–Out-of-range in magnetic pole detection	●	●	●
Er26-0	CANopen fault–CANopen disconnection		●	
Er26-1	CANopen fault–SDO index does not exist		●	
Er26-2	CANopen fault–SDO sub index does not exist		●	
Er26-3	CANopen fault–SDO data length error		●	
Er26-4	CANopen fault–SDO write data beyond the range		●	
Er26-5	CANopen fault–Read-only and non-modifiable		●	
Er26-6	CANopen fault–PDO mapping length error		●	
Er26-7	CANopen fault–PDO mapping data does not exist		●	
Er26-8	CANopen fault–PDO is not allowed to be changed during operating		●	
Er26-9	CANopen fault–PDO mapping is not allowed		●	
Er26-a	CANopen fault–Sync signal is too fast		●	
Er26-b	CANopen fault–Receiving fault		●	
Er26-c	CANopen fault–Sending fault		●	
Er26-d	CANopen fault–Sync signal repeat		●	
Er26-e	CANopen fault–Bus load ratio too high		●	

Fault code	Name	Attribute		
		History record	Can be cleared	Disable
Er26-f	CANopen fault–Incorrect parameter modification state		●	

برق موشن
BARGH MOTION

10.5 Record table of parameter setting

Parameters	Default setting	Drive 1	Drive 2	Drive 3	Change by	Changed on	Remarks

برق موشن
BARGH MOTION

E-mail: overseas@invt.com.cn Website: www.invt.com

The products are owned by **Shenzhen INVT Electric Co.,Ltd.**
Two companies are commissioned to manufacture: (For product code, refer to the 2nd/3rd place of S/N on the name plate.)

Shenzhen INVT Electric Co., Ltd. (origin code: 01)
Address: INVT Guangming Technology Building, Songbai Road, Matian, Guangming District, Shenzhen, China

INVT Power Electronics (Suzhou) Co., Ltd. (origin code: 06)
Address: 1# Kunlun Mountain Road, Science&Technology Town, Gaoxin District, Suzhou, Jiangsu, China

Industrial Automation: ■HMI ■PLC ■VFD ■Servo System ■Elevator Intelligent Control System ■Rail Transit Traction System

Energy & Power: ■UPS ■DCIM ■Solar Inverter ■SVG ■New Energy Vehicle Powertrain System ■New Energy Vehicle Charging System ■New Energy Vehicle Motor

66001-01289

Copyright© INVT.
Manual information may be subject to change without prior notice.

202402 (V1.0)