ABB drives

User’s manual
ACS150 drives (0.37...4 kW, 0.5...5 hp)

Power and productivity
for a better world™

List of related manuals

Drive manuals	Code (English)
ACS150 drives User's manual	*3AFE68576032*
ACS310 drives User's manual	*3AUA0000044201*

Option manuals and guides	
MUL1-R1 Installation instructions for ACS150, ACS310, ACS320, ACS350 and ACS355	*3AFE68642868*
MFDT-01 FlashDrop user's manual	*3AFE68591074*

Maintenance manuals	
Guide for capacitor reforming in ACS50, ACS55, ACS150, ACS310, ACS350, ACS355, ACS550, ACH550 and R1-R4 OINT-/SINT-boards	*3AFE68735190*

You can find manuals and other product documents in PDF format on the Internet. See section *Document library on the Internet* on the inside of the back cover. For manuals not available in the Document library, contact your local ABB representative.

ACS150 drives
0.37…4 kW
0.5…5 hp

User’s manual

3AFE68576032 Rev D
EN
EFFECTIVE: 2016-05-03

© 2016 ABB Oy. All Rights Reserved.

Table of contents

Table of contents

Safety

What this chapter contains 11
Use of warnings 11
Safety in installation and maintenance 11
Electrical safety 11
General safety 12
Safety in start-up and operation 13

Introduction to the manual

What this chapter contains 15
Applicability 15
Target audience 15
Purpose of the manual 15
Contents of this manual 15
Related documents 16
Categorization according to the frame size 16
Quick installation and commissioning flowchart 17

Operation principle and hardware description

What this chapter contains 19
Operation principle 19
Product overview 20
Layout 20
Power connections and control interfaces 21
Type designation label 22
Type designation key 22

Mechanical installation

What this chapter contains 23
Checking the installation site 23
Requirements for the installation site 23
Operation conditions 23
Wall 23
Floor 23
Free space around the drive 23
Required tools 24
Unpacking 24
Checking the delivery 25

Installing 25
Install the drive 25
With screws 25
On DIN rail 26
Horizontally 27
Fasten clamping plates 28

Planning the electrical installation

What this chapter contains 29
Implementing the AC power line connection 29
Selecting the supply disconnecting device (disconnecting means) 29
European union 29
Other regions 29
Checking the compatibility of the motor and drive 30
Selecting the power cables 30
General rules 30
Alternative power cable types 31
Motor cable shield 31
Additional US requirements 32
Conduit 32
Armored cable / shielded power cable 32
Selecting the control cables 33
General rules 33
Relay cable 33
Routing the cables 34
Control cable ducts 34
Protecting the drive, input power cable, motor and motor cable in short-circuit situations and against thermal overload 35
Protecting the drive and input power cable in short-circuit situations 35
Protecting the motor and motor cable in short-circuit situations 35
Protecting the drive, motor cable and input power cable against thermal overload 36
Protecting the motor against thermal overload 36
Residual current device (RCD) compatibility 36
Implementing a bypass connection 36
Protecting the contacts of relay outputs 37

Electrical installation

What this chapter contains 39
Checking the insulation of the assembly 39
Drive 39
Input power cable 39
Motor and motor cable 39
Checking the compatibility with IT (ungrounded) and corner-grounded TN systems 40
Connecting the power cables 41
Connection diagram 41
Connection procedure 42
Connecting the control cables 44
I/O terminals 44

PNP and NPN configuration for digital inputs . . . 45
External power supply for digital inputs . . . 45
Default I/O connection diagram . . . 46
Connection procedure . . . 47

Installation checklist

Checking the installation . . . 49

Start-up and control with I/O

What this chapter contains . . . 51
How to start up the drive . . . 51
How to control the drive through the I/O interface . . . 55

Control panel

What this chapter contains . . . 57
Integrated control panel . . . 57
Overview . . . 58
Operation . . . 59
How to perform common tasks . . . 60
How to start, stop and switch between local and remote control . . . 61
How to change the direction of the motor rotation . . . 61
How to set the frequency reference . . . 62
Output mode . . . 63
How to browse the monitored signals . . . 63
Reference mode . . . 64
How to view and set the frequency reference . . . 64
Parameter modes . . . 65
How to select a parameter and change its value . . . 65
How to select the monitored signals . . . 66
Changed parameters mode . . . 67
How to view and edit changed parameters . . . 67

Application macros

What this chapter contains . . . 69
Overview of macros . . . 69
Summary of I/O connections of application macros . . . 70
ABB standard macro . . . 71
Default I/O connections . . . 71
3-wire macro . . . 72
Default I/O connections . . . 72
Alternate macro . . . 73
Default I/O connections . . . 73
Motor potentiometer macro . . . 74
Default I/O connections . . . 74
Hand/Auto macro . . . 75

Default I/O connections 75
PID control macro 76
Default I/O connections 76
User macros 77

Actual signals and parameters

What this chapter contains 79
Terms and abbreviations 79
Default parameter values with different macros 79
Parameters in the Short parameter mode 80
99 START-UP DATA 80
04 FAULT HISTORY 81
11 REFERENCE SELECT 81
12 CONSTANT SPEEDS 82
13 ANALOG INPUTS 82
20 LIMITS 82
21 START/STOP 82
22 ACCEL/DECEL 83
Actual signals 84
01 OPERATING DATA 84
04 FAULT HISTORY 85
Parameters in the Long parameter mode 86
10 START/STOP/DIR 86
11 REFERENCE SELECT 89
12 CONSTANT SPEEDS 92
13 ANALOG INPUTS 94
14 RELAY OUTPUTS 94
16 SYSTEM CONTROLS 96
18 FREQ INPUT 98
20 LIMITS 98
21 START/STOP 99
22 ACCEL/DECEL 101
25 CRITICAL SPEEDS 104
26 MOTOR CONTROL 105
30 FAULT FUNCTIONS 107
31 AUTOMATIC RESET 112
32 SUPERVISION 114
33 INFORMATION 115
34 PANEL DISPLAY 116
40 PROCESS PID SET 1 119
99 START-UP DATA 124

Fault tracing

What this chapter contains 127
Safety 127
Alarm and fault indications 127
How to reset 127
Fault history 127

Alarm messages generated by the drive . . . 128
Fault messages generated by the drive . . . 130

Maintenance

What this chapter contains . . . 133
Maintenance intervals . . . 133
Cooling fan . . . 134
Fan replacement (R1 and R2) . . . 134
Capacitors . . . 135
Reforming the capacitors . . . 135
Power connections . . . 136
Control panel . . . 136
Cleaning . . . 136

Technical data

What this chapter contains . . . 137
Ratings . . . 137
Symbols . . . 138
Sizing . . . 138
Derating . . . 138
Temperature derating, I2N . . . 138
Altitude derating, I2N . . . 138
Switching frequency derating, I2N . . . 139
Fuses and alternate short-circuit protection . . . 139
Fuses . . . 139
Alternate short-circuit protection . . . 140
Fuses and MMP’s . . . 140
Size of copper conductor in cablings . . . 142
Dimensions, weights and free space requirements . . . 143
Dimensions and weights . . . 143
Symbols . . . 143
Free space requirements . . . 143
Losses, cooling data and noise . . . 144
Losses and cooling data . . . 144
Noise . . . 144
Terminal and lead-through data for the power cables . . . 145
Terminal data for the control cables . . . 145
Electric power network specification . . . 146
Motor connection data . . . 146
Control connection data . . . 148
Brake resistor connection . . . 148
Efficiency . . . 148
Degrees of protection . . . 148
Ambient conditions . . . 149
Materials . . . 149
Applicable standards . . . 150
CE marking . . . 150
Compliance with the European EMC Directive . . . 150

Compliance with the EN 61800-3:2004 150
Definitions 150
Compliance 151
Category C1 151
Category C2 151
Category C3 151
UL marking 152
UL checklist 152
C-Tick marking 152
RoHS marking 152
Brake resistors 153
Selecting the brake resistor 153
Selecting the brake resistor cables 155
Placing the brake resistor 155
Protecting the system in brake circuit fault situations 155
Protection of the system in cable and brake resistor short-circuit situations 155
Protection of the system in brake resistor overheating situations 155
Electrical installation 155
Start-up 156

Dimension drawings

Frame sizes R0 and R1, IP20 (cabinet installation) / UL open 158
Frame sizes R0 and R1, IP20 / NEMA 1 159
Frame size R2, IP20 (cabinet installation) / UL open 160
Frame size R2, IP20 / NEMA 1 161

Appendix: Process PID control

What this chapter contains 163
Process PID control 163
Quick configuration of process PID control 163
Pressure boost pump 164
How to scale the PID actual (feedback) signal 0...10 bar / 4...20 mA 165
How to scale the PID setpoint signal 165
PID sleep functionality 166

Further information

Product and service inquiries 171
Product training 171
Providing feedback on ABB Drives manuals 171
Document library on the Internet 171

Safety

What this chapter contains

The chapter contains safety instructions that you must follow when installing, operating and servicing the drive. If ignored, physical injury or death may follow, or damage may occur to the drive, motor or driven equipment. Read the safety instructions before you work on the drive.

Use of warnings

Warnings caution you about conditions which can result in serious injury or death and/or damage to the equipment, and advise on how to avoid the danger. The warning symbols are used as follows:

Electricity warning warns of hazards from electricity which can cause physical injury and/or damage to the equipment.

General warning warns about conditions, other than those caused by electricity, which can result in physical injury and/or damage to the equipment.

Safety in installation and maintenance

These warnings are intended for all who work on the drive, motor cable or motor.

Electrical safety

WARNING! Ignoring the instructions can cause physical injury or death, or damage to the equipment.

Only qualified electricians are allowed to install and maintain the drive!

- Never work on the drive, motor cable or motor when input power is applied. After disconnecting the input power, always wait for 5 minutes to let the intermediate circuit capacitors discharge before you start working on the drive, motor or motor cable.

  Always ensure by measuring with a multimeter (impedance at least 1 Mohm) that:
  1. There is no voltage between the drive input phases U1, V1 and W1 and the ground.
  2. There is no voltage between terminals BRK+ and BRK- and the ground.
- Do not work on the control cables when power is applied to the drive or to the external control circuits. Externally supplied control circuits may carry dangerous voltage even when the input power of the drive is switched off.
- Do not make any insulation or voltage withstand tests on the drive.

- Disconnect the internal EMC filter when installing the drive on an IT system (an ungrounded power system or a high-resistance-grounded [over 30 ohms] power system), otherwise the system will be connected to ground potential through the EMC filter capacitors. This may cause danger or damage the drive. See page *40*. **Note:** When the internal EMC filter is disconnected, the drive is not EMC compatible.
- Disconnect the internal EMC filter when installing the drive on a corner-grounded TN system, otherwise the drive will be damaged. See page *40*. **Note:** When the internal EMC filter is disconnected, the drive is not EMC compatible.
- All ELV (extra low voltage) circuits connected to the drive must be used within a zone of equipotential bonding, i.e. within a zone where all simultaneously accessible conductive parts are electrically connected to prevent hazardous voltages appearing between them. This is accomplished by a proper factory grounding.

Note:

Even when the motor is stopped, dangerous voltage is present at the power circuit terminals U1, V1, W1 and U2, V2, W2 and BRK+ and BRK-.

General safety

WARNING! Ignoring the following instructions can cause physical injury or death, or damage to the equipment.

- The drive is not field repairable. Never attempt to repair a malfunctioning drive; contact your local ABB representative or Authorized Service Center for replacement.
- Make sure that dust from drilling does not enter the drive during the installation. Electrically conductive dust inside the drive may cause damage or lead to malfunction.
- Ensure sufficient cooling.

Safety in start-up and operation

These warnings are intended for all who plan the operation, start up or operate the drive.

WARNING! Ignoring the following instructions can cause physical injury or death, or damage to the equipment.

- Before adjusting the drive and putting it into service, make sure that the motor and all driven equipment are suitable for operation throughout the speed range provided by the drive. The drive can be adjusted to operate the motor at speeds above and below the speed provided by connecting the motor directly to the power line.
- Do not activate automatic fault reset functions if dangerous situations can occur. When activated, these functions reset the drive and resume operation after a fault.
- Do not control the motor with an AC contactor or disconnecting device (disconnecting means); use instead the control panel start and stop keys and or external commands (I/O). The maximum allowed number of charging cycles of the DC capacitors (that is, power-ups by applying power) is two per minute and the maximum total number of charging are 15 000.

Note:

- If an external source for start command is selected and it is ON, the drive starts immediately after an input voltage break or fault reset unless the drive is configured for 3-wire (a pulse) start/stop.
- When the control location is not set to local (LOC not shown on the display), the stop key on the control panel does not stop the drive. To stop the drive using the control panel, press the LOC/REM key and then the stop key .

Introduction to the manual

What this chapter contains

The chapter describes applicability, the target audience and purpose of this manual. It describes the contents of this manual and refers to a list of related manuals for more information. It also contains a flowchart of steps for checking the delivery, installing and commissioning the drive. The flowchart refers to chapters/sections in this manual.

Applicability

The manual is applicable to the ACS150 drive firmware version 1.35b or later. See parameter *3301* FIRMWARE on page *115*.

Target audience

The reader is expected to know the fundamentals of electricity, wiring, electrical components and electrical schematic symbols.

This manual is written for readers worldwide. Both SI and imperial units are shown. Special US instructions for installations in the United States are given.

Purpose of the manual

This manual provides information needed for planning the installation, installing, commissioning, using and servicing the drive.

Contents of this manual

The manual consists of the following chapters:

- *Safety* (page *11*) gives safety instructions you must follow when installing, commissioning, operating and servicing the drive.
- *Introduction to the manual* (this chapter, page *15*) describes applicability, target audience, purpose and contents of this manual. It also contains a quick installation and commissioning flowchart.
- *Operation principle and hardware description* (page *19*) describes the operation principle, layout, type designation label and type designation information. It also shows a general diagram of power connections and control interfaces.
- *Mechanical installation* (page *23*) tells how to check the installation site, unpack, check the delivery and install the drive mechanically.
- *Planning the electrical installation* (page *29*) tells how to check the compatibility of the motor and the drive and select cables, protections and cable routing.

- *Electrical installation* (page *39*) tells how to check the insulation of the assembly and the compatibility with IT (ungrounded) and corner-grounded TN systems as well as connect power cables and control cables.
- *Installation checklist* (page *49*) contains a checklist for checking the mechanical and electrical installation of the drive.
- *Start-up and control with I/O* (page *51*) tells how to start, stop, change the direction of the motor rotation and adjust the motor speed through the I/O interface.
- *Control panel* (page *57*) describes the control panel keys, LED indicators and display fields and tells how to use the panel for control, monitoring and changing the settings.
- *Application macros* (page *69*) gives a brief description of each application macro together with a wiring diagram showing the default control connections. It also explains how to save a user macro and how to recall it.
- *Actual signals and parameters* (page *79*) describes actual signals and parameters. It also lists the default values for the different macros.
- *Fault tracing* (page *127*) tells how to reset faults and view fault history. It lists all alarm and fault messages including the possible cause and corrective actions.
- *Maintenance* (page *133*) contains preventive maintenance instructions.
- *Technical data* (page *137*) contains technical specifications of the drive, such as ratings, sizes and technical requirements as well as provisions for fulfilling the requirements for CE and other marks.
- *Dimension drawings* (page *157*) shows dimension drawings of the drive.
- *Appendix: Process PID control* (page *163*) contains instructions on quick configuration of the process control, gives an application example and describes the PID sleep functionality.
- *Further information* (page *171*) (inside of the back cover, page *171*) tells how to make product and service inquiries, get information on product training, provide feedback on ABB Drives manuals and find documents on the Internet.

Related documents

See *List of related manuals* on page *2* (inside of the front cover).

Categorization according to the frame size

The ACS150 is manufactured in frame sizes R0...R2. Some instructions and other information which only concern certain frame sizes are marked with the symbol of the frame size (R0...R2). To identify the frame size of your drive, see the table in section *Ratings* on page *137*.

Quick installation and commissioning flowchart

Task	See
Identify the frame size of your drive: R0…R2.	*Operation principle and hardware description: Type designation key* on page *22* *Technical data*: *Ratings* on page *137*
Plan the installation: select the cables, etc. Check the ambient conditions, ratings and required cooling air flow.	*Planning the electrical installation* on page *29* *Technical data* on page *137*
Unpack and check the drive.	*Mechanical installation: Unpacking* on page *24*
If the drive is connected to an IT (ungrounded) or corner-grounded system, check that the internal EMC filter is not connected.	*Operation principle and hardware description: Type designation key* on page *22 Electrical installation: Checking the compatibility with IT (ungrounded) and corner-grounded TN systems* on page *40*
Install the drive on a wall or in a cabinet.	*Mechanical installation* on page *23*
Route the cables.	*Planning the electrical installation*: *Routing the cables* on page *34*
Check the insulation of the input cable and the motor and the motor cable.	*Electrical installation: Checking the insulation of the assembly* on page *39*
Connect the power cables.	*Electrical installation: Connecting the power cables* on page *41*
Connect the control cables.	*Electrical installation: Connecting the control cables* on page *44*
Check the installation.	*Installation checklist* on page *49*
Commission the drive.	*Start-up and control with I/O* on page *51*

Operation principle and hardware description

What this chapter contains

The chapter briefly describes the operation principle, layout, type designation label and type designation information. It also shows a general diagram of power connections and control interfaces.

Operation principle

The ACS150 is a wall or cabinet mountable drive for controlling AC induction motors.

The figure below shows the simplified main circuit diagram of the drive. The rectifier converts three-phase AC voltage to DC voltage. The capacitor bank of the intermediate circuit stabilizes the DC voltage. The inverter converts the DC voltage back to AC voltage for the AC motor. The brake chopper connects the external brake resistor to the intermediate DC circuit when the voltage in the circuit exceeds its maximum limit.

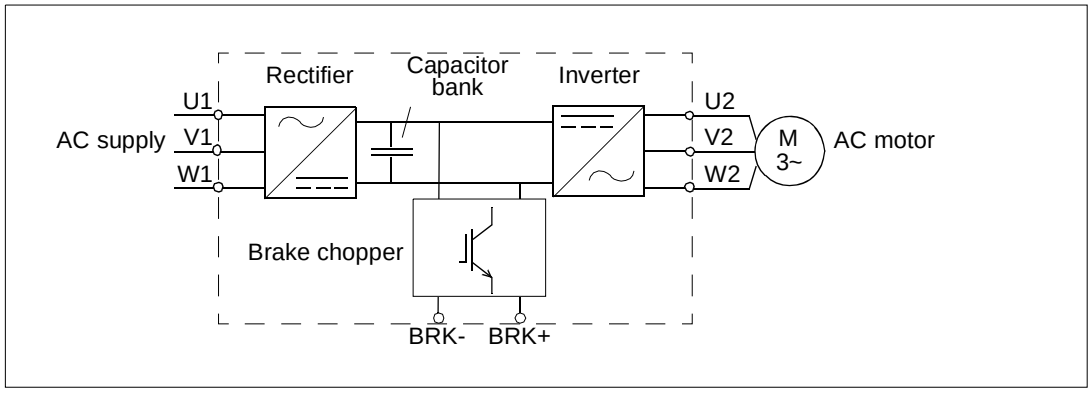

Product overview

Layout

The layout of the drive is presented below. The construction of frame sizes R0…R2 varies to some extent.

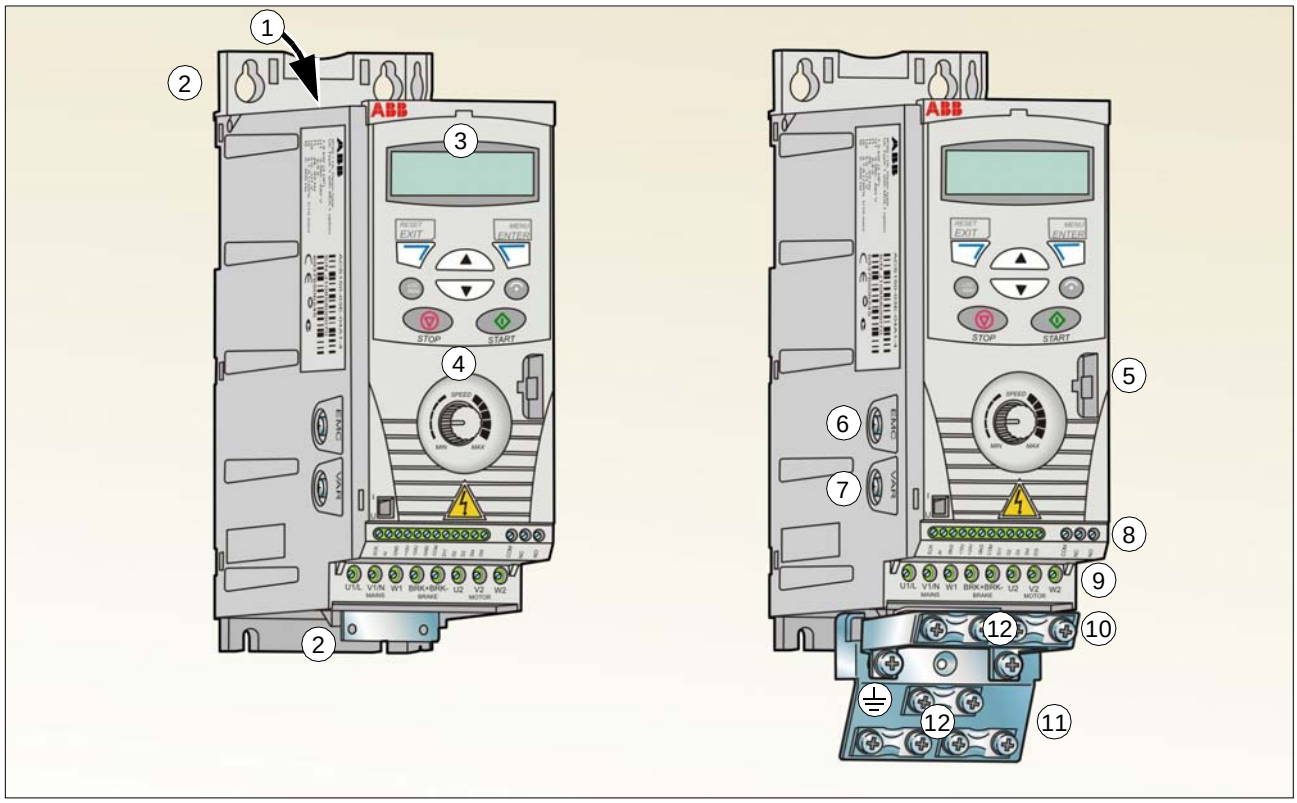

Without plates (R0 and R1)

1	Cooling outlet through top cover
2	Mounting holes
3	Integrated control panel
4	Integrated potentiometer

With plates (R0 and R1)

5	FlashDrop connection
6	EMC filter grounding screw (EMC)
7	Varistor grounding screw (VAR)
8	I/O connections
9	Input power connection (U1, V1, W1), brake resistor connection (BRK+, BRK-) and motor connection (U2, V2, W2)
10	I/O clamping plate
11	Clamping plate
12	Clamps

Power connections and control interfaces

The diagram gives an overview of connections. The I/O connections are parameterable. See chapter *Application macros* on page *69* for the I/O connections for the different macros and chapter *Electrical installation* on page *39* for installation in general.

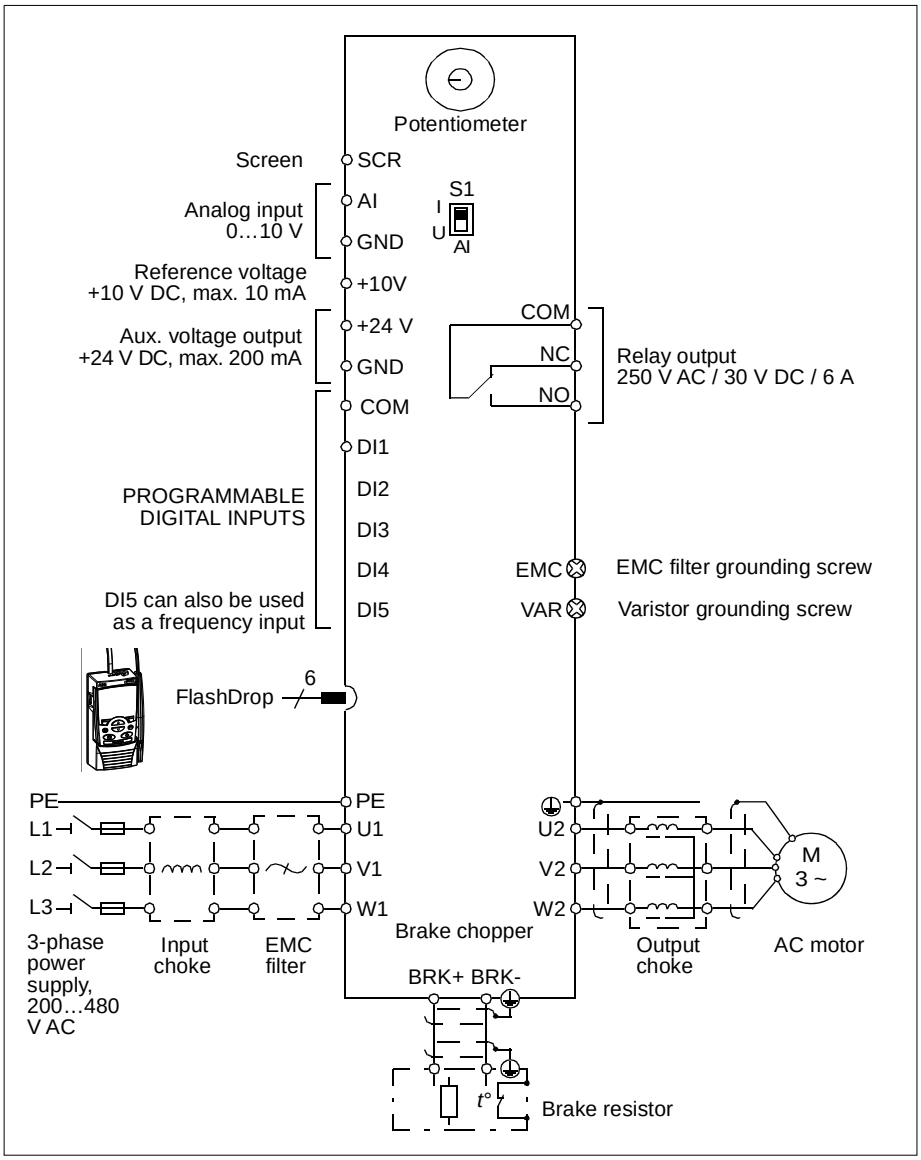

Note: For 1-phase power supply, connect power to U1/L and V1/N terminals. For connecting the power cables, see *Connecting the power cables* on page *41*.

Type designation label

The type designation label is attached to the left side of the drive. An example label and explanation of the label contents are shown below.

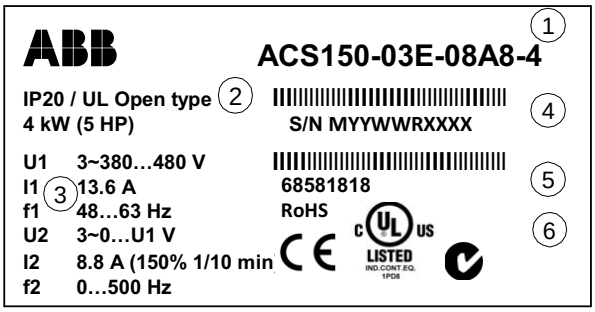

Type designation label

1	Type designation, see section *Type designation key* on page *22*
2	Degree of protection by enclosure (IP and UL/NEMA)
3	Nominal ratings, see section *Ratings* on page *137*.
4	Serial number of format MYYWWRXXXX, where M: Manufacturer YY: 09, 10, 11, … for 2009, 2010, 2011, … WW: 01, 02, 03, … for week 1, week 2, week 3, … R: A, B, C, … for product revision number XXXX: Integer starting every week from 0001
5	ABB MRP code of the drive
6	CE marking and C-Tick, C-UL US and RoHS marks (the label of your drive shows the valid markings)

Type designation key

The type designation contains information on the specifications and configuration of the drive. You find the type designation label attached to the drive. The first digits from the left express the basic configuration, for example ACS150-03E-08A8-4. The explanations of the type designation label selections are described below.

ACS150-03E-08A8-4

ACS150 product series

1-phase/3-phase
01 = 1-phase input
03 = 3-phase input

Configuration
E = EMC filter connected, 50 Hz frequency
U = EMC filter disconnected, 60 Hz frequency

Output current rating
In format xxAy, where xx indicates the integer part and y the fractional part, for example, 08A8 means 8.8 A.
For more information, see section *Ratings* on page *137*.

Input voltage range
2 = 200…240 V AC
4 = 380…480 V AC

Mechanical installation

What this chapter contains

The chapter describes tells how to check the installation site, unpack, check the delivery and install the drive mechanically.

Checking the installation site

The ACS150 may be installed on the wall or in a cabinet. Check the enclosure requirements for the need to use the NEMA 1 option in wall installations (see chapter *Technical data* on page *137*).

The drive can be mounted in four different ways:

a) vertical back mounting (all frame sizes)

b) horizontal back mounting (frame sizes R1…R2)

c) vertical side mounting (all frame sizes)

d) vertical DIN rail mounting (all frame sizes).

Check the installation site according to the requirements below. Refer to chapter *Dimension drawings* on page *157* for frame details.

Requirements for the installation site

Operation conditions

See chapter *Technical data* on page *137* for the allowed operation conditions of the drive.

Wall

The wall should be as close to vertical and even as possible, of non-flammable material and strong enough to carry the weight of the drive.

Floor

The floor/material below the installation should be non-flammable.

Free space around the drive

In vertical mounting, the required free space for cooling above and below the drive is 75 mm (3 in). No free space is required on the sides of the drive, so the drives can be mounted immediately next to each other.

When you install the drive horizontally, you need to have free space both above and below AND on the sides of the drive. For more information, see the figure in section *Horizontally* on page *27*.

Required tools

To install the drive, you need the following tools:

- screwdrivers (as appropriate for the mounting hardware used)
- wire stripper
- tape measure
- drill (if the drive is installed with screws/bolts)
- mounting hardware: screws or bolts (if the drive is installed with screws/bolts). For the number of screws/bolts, see section *With screws* on page *25*.

Unpacking

The drive (1) is delivered in a package that also contains the following items (frame size R0 shown in the figure):

- plastic bag (2) including clamping plate, I/O clamping plate, clamps and screws
- mounting template, integrated into the package (3)
- user's manual (4).

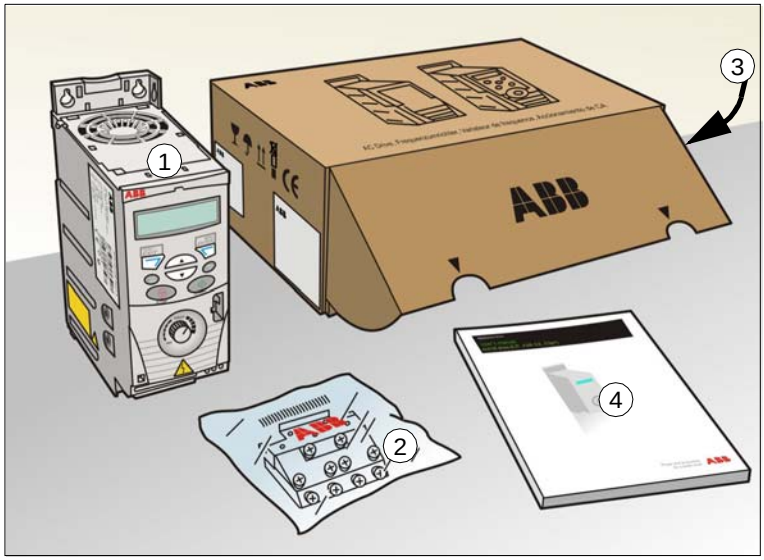

Checking the delivery

Check that there are no signs of damage. Notify the shipper immediately if damaged components are found.

Before attempting installation and operation, check the information on the type designation label of the drive to verify that the drive is of the correct type. See section *Type designation label* on page *22*.

Installing

The instructions in this manual cover drives with the IP20 degree of protection. To comply with NEMA 1, use the MUL1-R1 option kit, which is delivered with multilingual installation instructions (3AFE68642868).

Install the drive

Install the drive with screws or on a DIN rail as appropriate.

Note: Make sure that dust from drilling does not enter the drive during the installation.

With screws

For installing the drive horizontally, see section *Horizontally* on page *27*.

1. Mark the hole locations using for example, the mounting template cut out from the package. The locations of the holes are also shown in the drawings in chapter *Dimension drawings* on page *157*. The number and location of the holes used depend on how the drive is installed:
   a) back mounting: four holes
   b) side mounting: three holes; one of the bottom holes is located in the clamping plate.
2. Fix the screws or bolts to the marked locations.

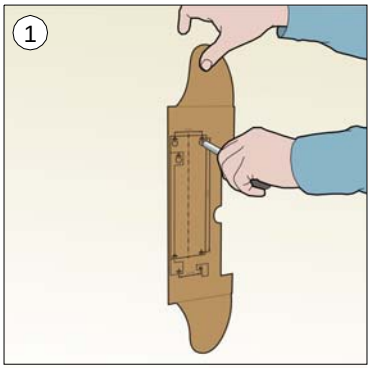

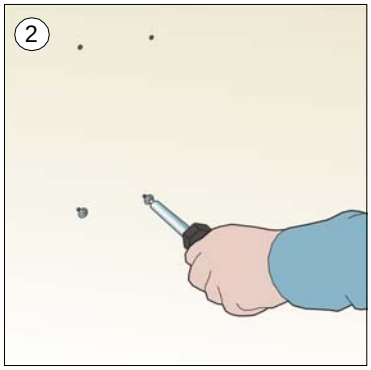

3. Position the drive onto the screws on the wall.
4. Tighten the screws in the wall securely.

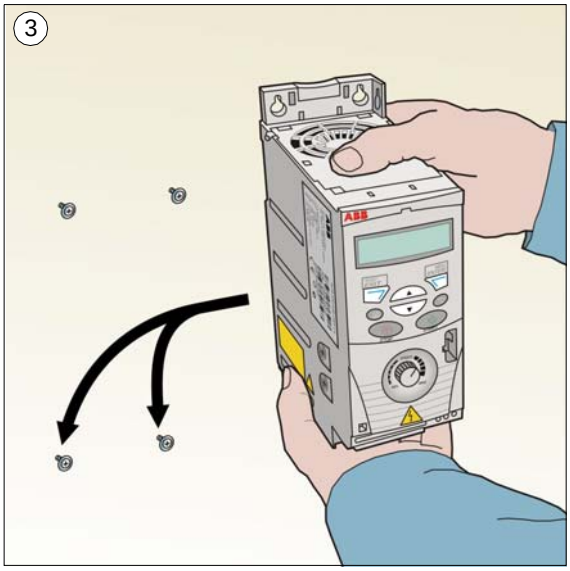

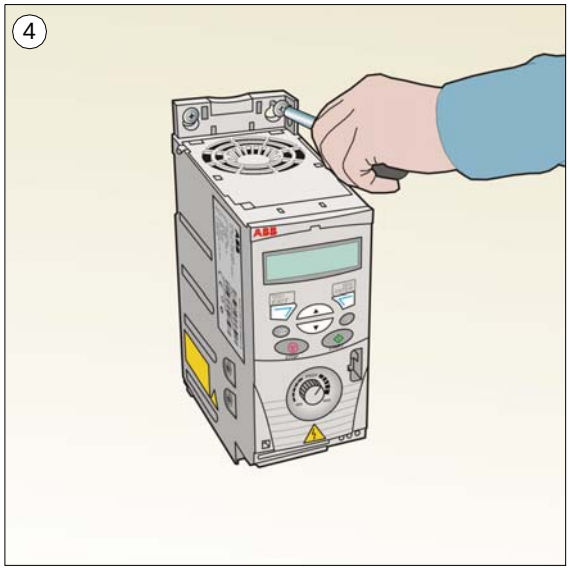

On DIN rail

1. Click the drive to the rail. To detach the drive, press the release lever on top of the drive as shown in Figure 1b.

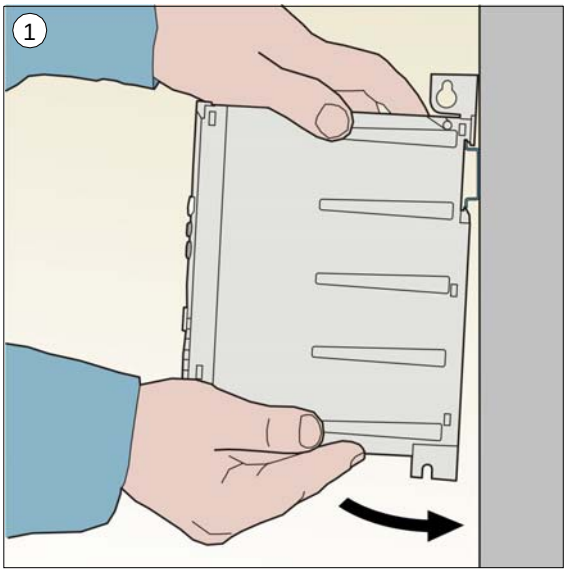

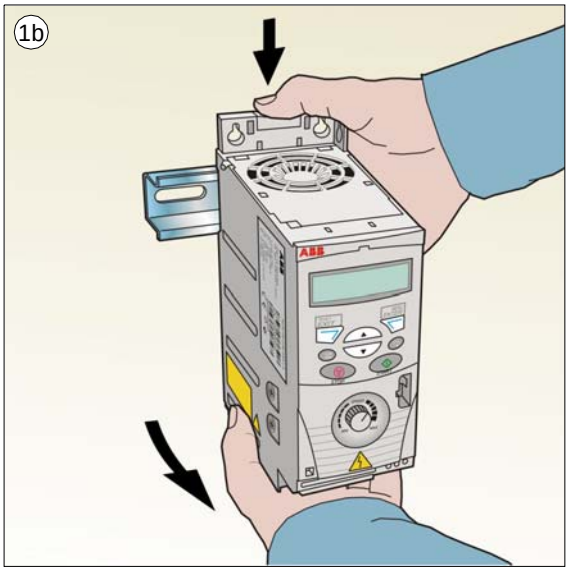

Horizontally

You can install the drive horizontally with screws (**only** back mounting, four holes). For the installation instructions, see section *With screws* on page *25*.

Note: For the required free space, see the following figure.

WARNING! Horizontal mounting is permitted only for frame sizes R1 and R2 because they include a cooling fan. Position the drive so that the connectors at the bottom of the drive are situated to the right and the fan to the left as shown in the following figure. Do not install frame size R0 horizontally!

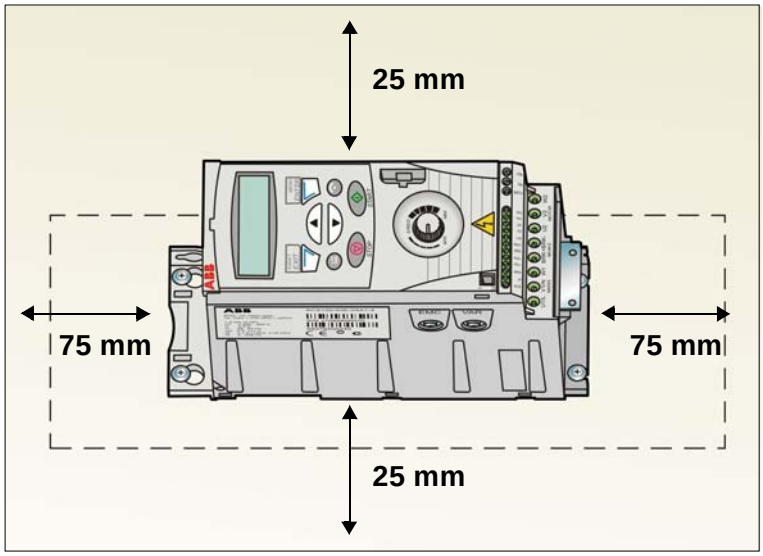

Fasten clamping plates

Note: Make sure that you do not throw the clamping plates away as they are required for proper grounding of the power and control cables.

1. Fasten the clamping plate to the plate at the bottom of the drive with the provided screws.
2. Fasten the I/O clamping plate to the clamping plate with the provided screws.

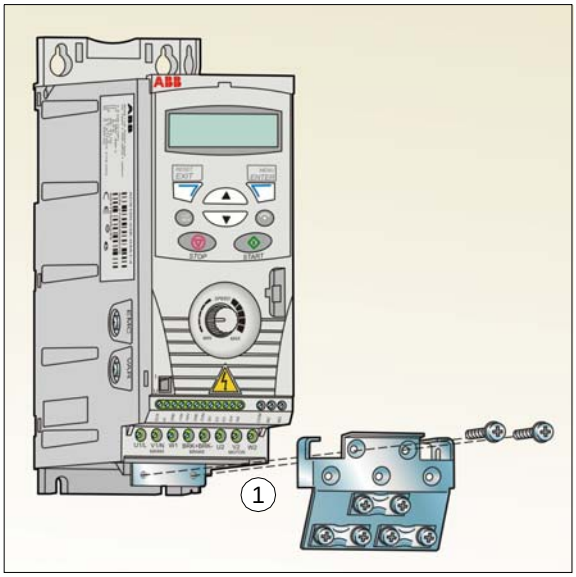

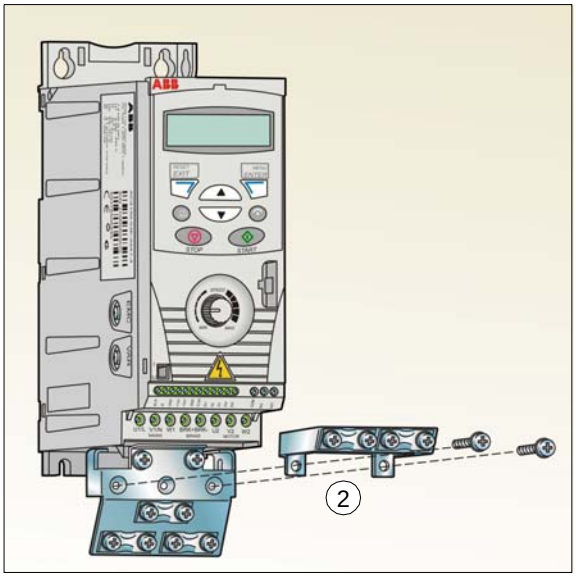

Planning the electrical installation

What this chapter contains

The chapter contains the instructions that you must follow when checking the compatibility of the motor and drive, and selecting cables, protections, cable routing and way of operation for the drive.

Note: The installation must always be designed and made according to applicable local laws and regulations. ABB does not assume any liability whatsoever for any installation which breaches the local laws and/or other regulations. Furthermore, if the recommendations given by ABB are not followed, the drive may experience problems that the warranty does not cover.

Implementing the AC power line connection

See the requirements in section *Electric power network specification* on page *146*. Use a fixed connection to the AC power line.

WARNING! As the leakage current of the device typically exceeds 3.5 mA, a fixed installation is required according to IEC 61800-5-1.

Selecting the supply disconnecting device (disconnecting means)

Install a hand-operated supply disconnecting device (disconnecting means) between the AC power source and the drive. The disconnecting device must be of a type that can be locked to the open position for installation and maintenance work.

European union

To meet the European Union Directives, according to standard EN 60204-1, Safety of Machinery, the disconnecting device must be one of the following types:

- a switch-disconnector of utilization category AC-23B (EN 60947-3)
- a disconnector having an auxiliary contact that in all cases causes switching devices to break the load circuit before the opening of the main contacts of the disconnector (EN 60947-3)
- a circuit breaker suitable for isolation in accordance with EN 60947-2.

Other regions

The disconnecting device must conform to the applicable safety regulations.

Checking the compatibility of the motor and drive

Check that the 3-phase AC induction motor and the drive are compatible according to the rating table in section *Ratings* on page *137*. The table lists the typical motor power for each drive type.

Selecting the power cables

General rules

Dimension the input power and motor cables **according to local regulations**.

- The input power and the motor cables must be able to carry the corresponding load currents. See section *Ratings* on page *137* for the rated currents.
- The cable must be rated for at least 70 °C maximum permissible temperature of the conductor in continuous use. For US, see section *Additional US requirements* on page *32*.
- The conductivity of the PE conductor must be equal to that of the phase conductor (same cross-sectional area).
- 600 V AC cable is accepted for up to 500 V AC.
- Refer to chapter *Technical data* on page *137* for the EMC requirements.

A symmetrical shielded motor cable (see the following figure) must be used to meet the EMC requirements of the CE and C-Tick marks.

A four-conductor system is allowed for input cabling, but a shielded symmetrical cable is recommended.

Compared to a four-conductor system, the use of a symmetrical shielded cable reduces electromagnetic emission of the whole drive system as well as motor bearing currents and wear.

Alternative power cable types

Power cable types that can be used with the drive are presented below.

Allowed as motor cables
(recommended for input cables also)

Symmetrical shielded cable: three phase conductors, a concentric or otherwise symmetrically constructed PE conductor and a shield

Note: A separate PE conductor is required if the conductivity of the cable shield is not sufficient for the purpose.

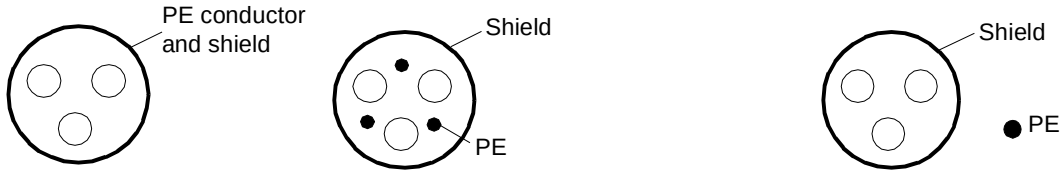

Allowed as input cables

A four-conductor system: three phase conductors and a protective conductor

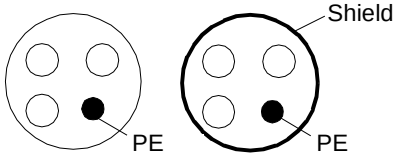

Not allowed for motor cabling: Separate cables for each phase and PE

Motor cable shield

To function as a protective conductor, the shield must have the same cross-sectional area as the phase conductors when they are made of the same metal.

To effectively suppress radiated and conducted radio-frequency emissions, the shield conductivity must be at least 1/10 of the phase conductor conductivity. The requirements are easily met with a copper or aluminium shield. The minimum requirement of the motor cable shield of the drive is shown below. It consists of a concentric layer of copper wires. The better and tighter the shield, the lower the emission level and bearing currents.

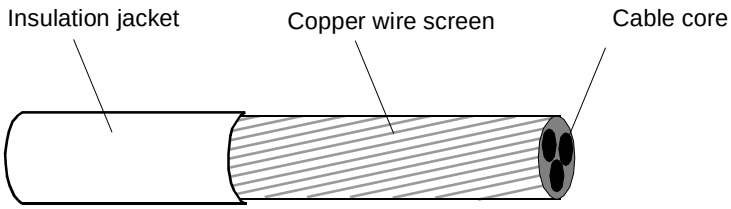

Additional US requirements

Type MC continuous corrugated aluminium armor cable with symmetrical grounds or shielded power cable is recommended for the motor cables if metallic conduit is not used.

The power cables must be rated for 75 °C (167 °F).

Conduit

Where conduits must be coupled together, bridge the joint with a ground conductor bonded to the conduit on each side of the joint. Bond the conduits also to the drive enclosure. Use separate conduits for input power, motor, brake resistors and control wiring. Do not run motor wiring from more than one drive in the same conduit.

Armored cable / shielded power cable

Six-conductor (three phases and three ground) type MC continuous corrugated aluminium armor cable with symmetrical grounds is available from the following suppliers (trade names in parentheses):

- Anixter Wire & Cable (Philsheath)
- BICC General Corp (Philsheath)
- Rockbestos Co. (Gardex)
- Oaknite (CLX).

Shielded power cables are available from the following suppliers:

- Belden
- LAPPKABEL (ÖLFLEX)
- Pirelli.

Selecting the control cables

General rules

The analog control cable (if analog input AI is used) and the cable used for the frequency input must be shielded.

Use a double-shielded twisted pair cable (Figure a, for example, JAMAK by Draka NK Cables) for the analog signal.

A double-shielded cable is the best alternative for low-voltage digital signals, but a single-shielded or unshielded twisted multipair cable (Figure b) is also usable. However, for frequency input, always use a shielded cable.

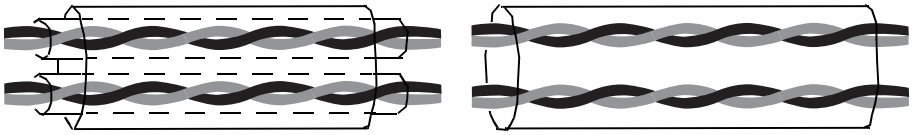

a
Double-shielded twisted multipair cable

b
Single-shielded twisted multipair cable

Run the analog signal and digital signals in separate cables.

Relay-controlled signals, providing their voltage does not exceed 48 V, can be run in the same cables as digital input signals. It is recommended that the relay-controlled signals are run as twisted pairs.

Never mix 24 V DC and 115/230 V AC signals in the same cable.

Relay cable

The cable type with braided metallic screen (for example, ÖLFLEX by LAPPKABEL) has been tested and approved by ABB.

Routing the cables

Route the motor cable away from other cable routes. Motor cables of several drives can be run in parallel installed next to each other. It is recommended that the motor cable, input power cable and control cables are installed on separate trays. Avoid long parallel runs of motor cables with other cables to decrease electromagnetic interference caused by the rapid changes in the drive output voltage.

Where control cables must cross power cables make sure that they are arranged at an angle as near to 90 degrees as possible.

The cable trays must have good electrical bonding to each other and to the grounding electrodes. Aluminium tray systems can be used to improve local equalizing of potential.

A diagram of the cable routing is shown below.

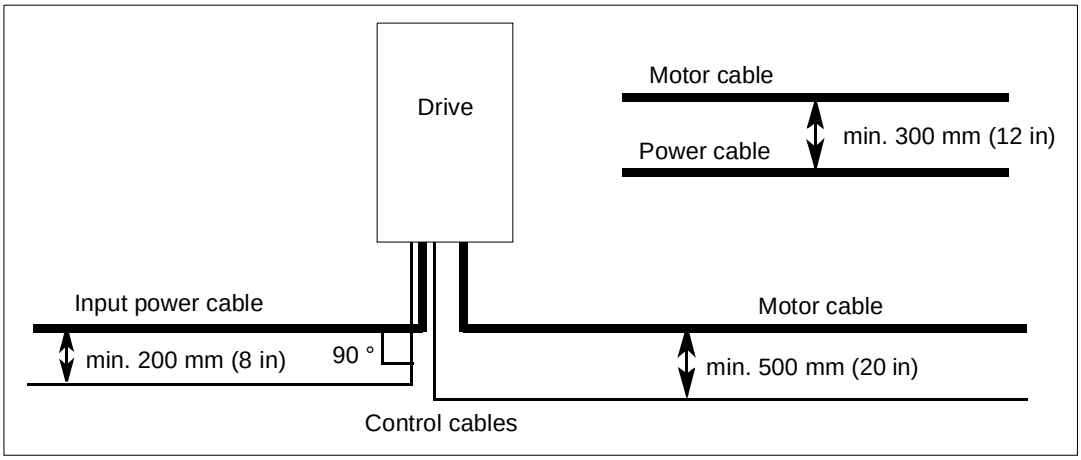

Control cable ducts

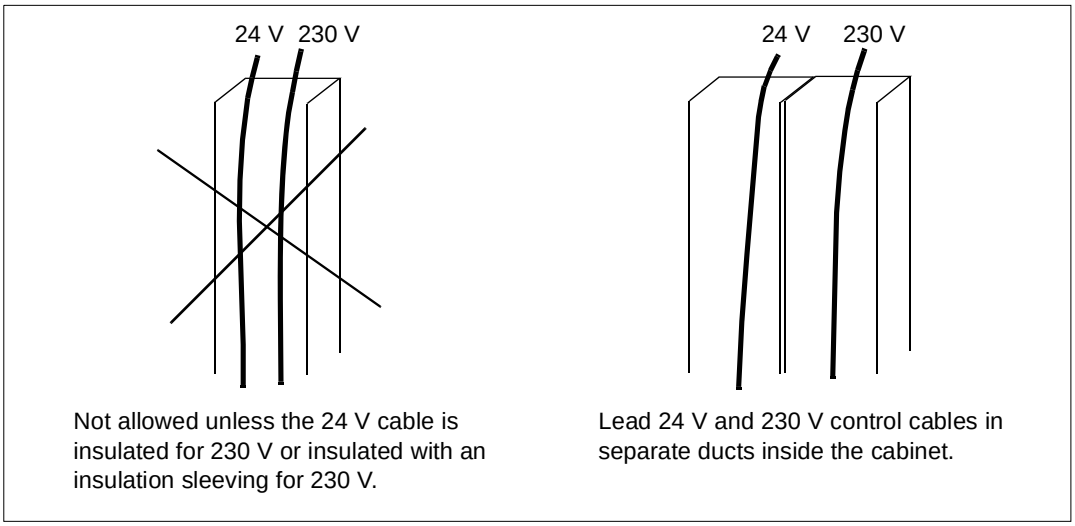

Protecting the drive, input power cable, motor and motor cable in short-circuit situations and against thermal overload

Protecting the drive and input power cable in short-circuit situations

Arrange the protection according to the following guidelines.

Circuit diagram	Short-circuit protection
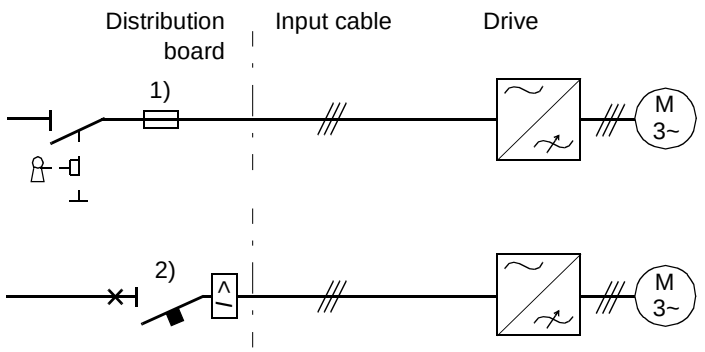	Protect the drive and input cable with fuses or a circuit breaker. See footnotes 1) and 2).

1) Size the fuses according to instructions given in chapter *Technical data on page 137*. The fuses protect the input cable in short-circuit situations, restrict drive damage and prevent damage to adjoining equipment in case of a short circuit inside the drive.

2) Circuit breakers which have been tested by ABB with the ACS150 can be used. Fuses must be used with other circuit breakers. Contact your local ABB representative for the approved breaker types and supply network characteristics.

   The protective characteristics of circuit breakers depend on the type, construction and settings of the breakers. There are also limitations pertaining to the short-circuit capacity of the supply network.

WARNING! Due to the inherent operating principle and construction of circuit breakers, independent of the manufacturer, hot ionized gases may escape from the breaker enclosure in case of a short circuit. To ensure safe use, special attention must be paid to the installation and placement of the breakers. Follow the manufacturer's instructions.

Protecting the motor and motor cable in short-circuit situations

The drive protects the motor and motor cable in a short-circuit situation when the motor cable is dimensioned according to the nominal current of the drive. No additional protection devices are needed.

Protecting the drive, motor cable and input power cable against thermal overload

The drive protects itself and the input and motor cables against thermal overload when the cables are dimensioned according to the nominal current of the drive. No additional thermal protection devices are needed.

WARNING! If the drive is connected to multiple motors, a separate thermal overload switch or a circuit breaker must be used for protecting each cable and motor. These devices may require a separate fuse to cut off the short-circuit current.

Protecting the motor against thermal overload

According to regulations, the motor must be protected against thermal overload and the current must be switched off when overload is detected. The drive includes a motor thermal protection function that protects the motor and switches off the current when necessary. See parameter *3005* MOT THERM PROT for more information on the motor thermal protection.

Residual current device (RCD) compatibility

ACS150-01x drives are suitable to be used with residual current devices of Type A, ACS150-03x drives with residual current devices of Type B. For ACS150-03x drives, other measures for protection in case of direct or indirect contact, such as separation from the environment by double or reinforced insulation or isolation from the supply system by a transformer, can also be applied.

Implementing a bypass connection

WARNING! Never connect the supply power to the drive output terminals U2, V2 and W2. Power line voltage applied to the output can result in permanent damage to the drive.

If frequent bypassing is required, employ mechanically connected switches or contactors to ensure that the motor terminals are not connected to the AC power line and drive output terminals simultaneously.

Protecting the contacts of relay outputs

Inductive loads (relays, contactors, motors) cause voltage transients when switched off.

Equip inductive loads with noise attenuating circuits (varistors, RC filters [AC] or diodes [DC]) in order to minimize the EMC emission at switch-off. If not suppressed, the disturbances may connect capacitively or inductively to other conductors in the control cable and form a risk of malfunction in other parts of the system.

Install the protective component as close to the inductive load as possible. Do not install protective components at the I/O terminal block.

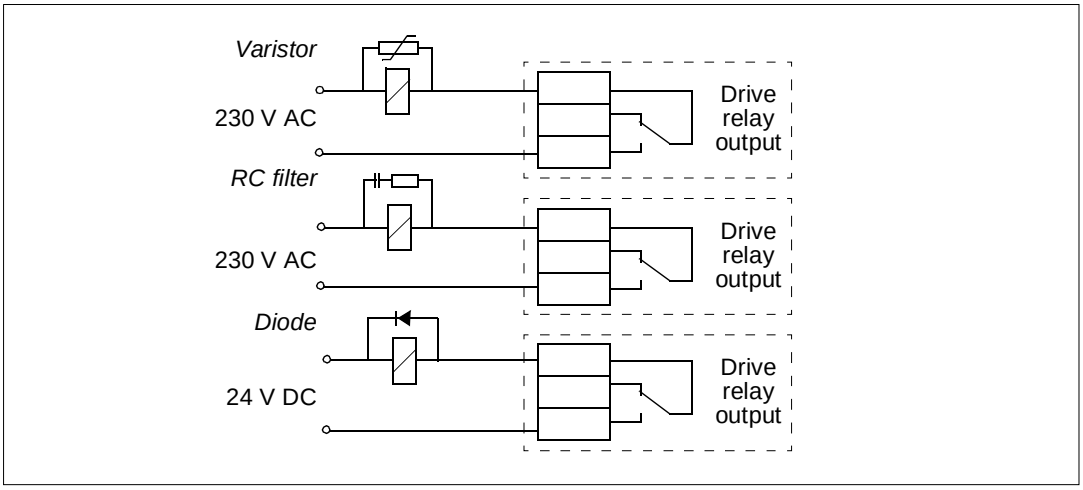

Electrical installation

What this chapter contains

The chapter tells how to check the insulation of the assembly and the compatibility with IT (ungrounded) and corner-grounded TN systems as well as connect power cables and control cables.

WARNING! The work described in this chapter may only be carried out by a qualified electrician. Follow the instructions in chapter *Safety* on page *11*. Ignoring the safety instructions can cause injury or death.

Make sure that the drive is disconnected from the input power during installation. If the drive is already connected to the input power, wait for 5 minutes after disconnecting the input power.

Checking the insulation of the assembly

Drive

Do not make any voltage tolerance or insulation resistance tests (for example, hi-pot or megger) on any part of the drive as testing can damage the drive. Every drive has been tested for insulation between the main circuit and the chassis at the factory. Also, there are voltage-limiting circuits inside the drive which cut down the testing voltage automatically.

Input power cable

Check the insulation of the input power cable according to local regulations before connecting to the drive.

Motor and motor cable

Check the insulation of the motor and motor cable as follows:

1. Check that the motor cable is connected to the motor and disconnected from the drive output terminals U2, V2 and W2.
2. Measure the insulation resistance between each phase conductor and the Protective Earth conductor using a measuring voltage of 500 V DC. The insulation resistance of an ABB motor must exceed 100 Mohm (reference value at 25 °C or 77 °F). For the insulation resistance of other motors, please consult the manufacturer's instructions. **Note:** Moisture inside the motor casing reduces the insulation resistance. If moisture is suspected, dry the motor and repeat the measurement.

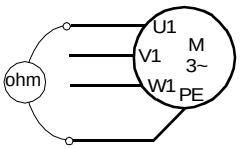

Checking the compatibility with IT (ungrounded) and corner-grounded TN systems

WARNING! Disconnect the internal EMC filter when installing the drive on an IT system (an ungrounded power system or a high-resistance-grounded [over 30 ohms] power system), otherwise the system will be connected to ground potential through the EMC filter capacitors. This may cause danger or damage the drive.

Disconnect the internal EMC filter when installing the drive on a corner-grounded TN system, otherwise the drive will be damaged.

1. If you have an IT (ungrounded) system or corner-grounded TN system, disconnect the internal EMC filter by removing the EMC screw. For 3-phase U-type drives (with type designation ACS150-03U-), the EMC screw is already removed at the factory and replaced by a plastic screw.

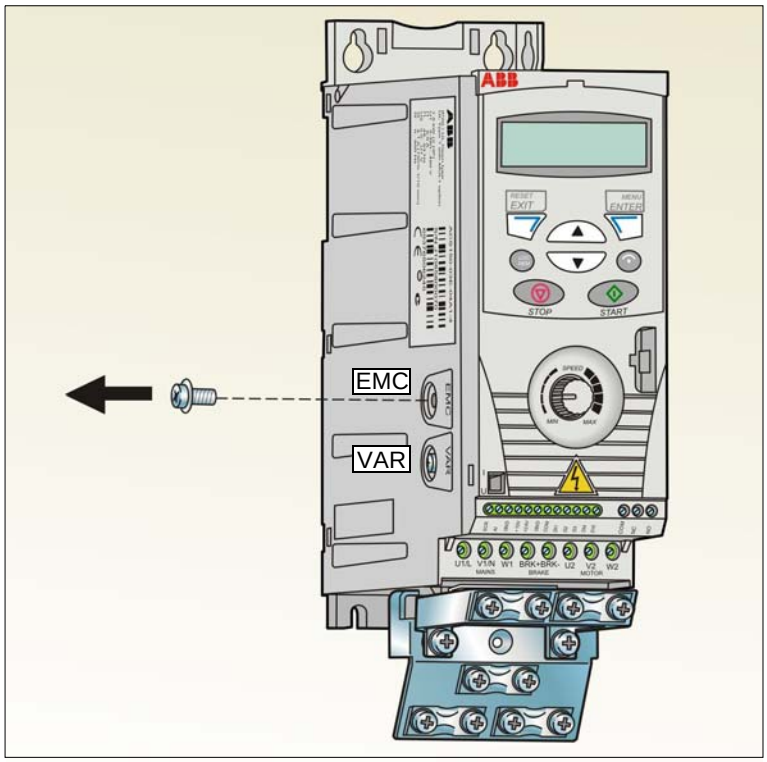

Connecting the power cables

Connection diagram

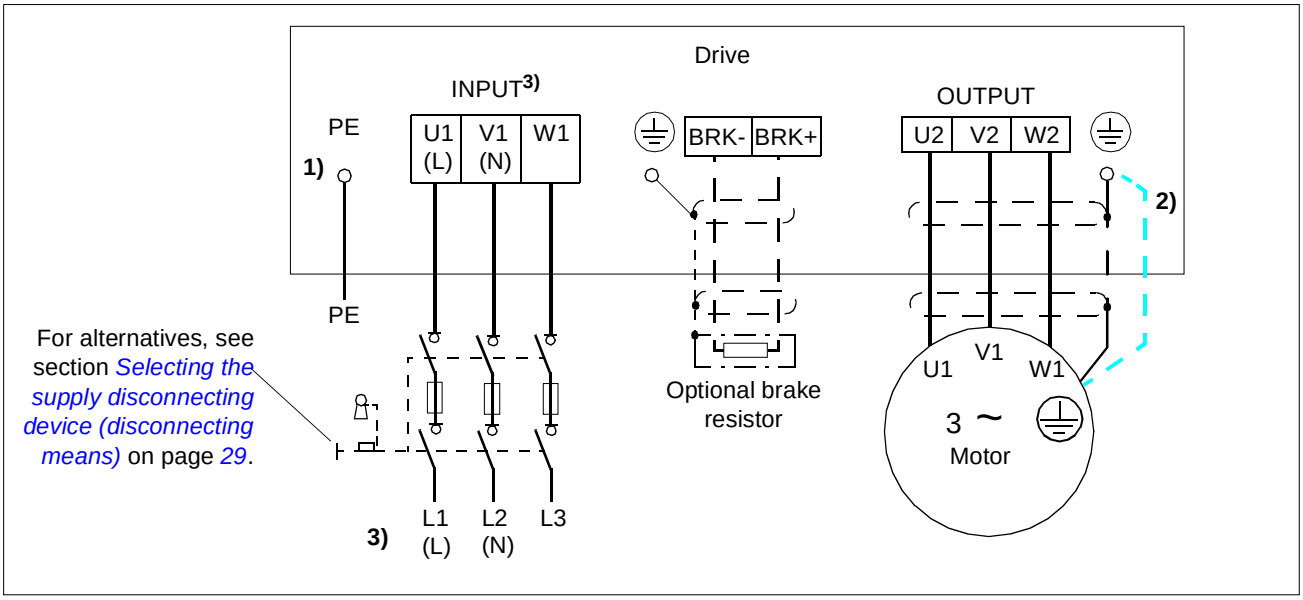

1) Ground the other end of the PE conductor at the distribution board.

2) Use a separate grounding cable if the conductivity of the cable shield is insufficient (smaller than the conductivity of the phase conductor) and there is no symmetrically constructed grounding conductor in the cable (see section *Selecting the power cables* on page *30*).

3) L and N are connection markings for 1-phase supply.

Note:

Do not use an asymmetrically constructed motor cable.

If there is a symmetrically constructed grounding conductor in the motor cable in addition to the conductive shield, connect the grounding conductor to the grounding terminal at the drive and motor ends.

For the 1-phase power supply, connect power to U1 (L) and V1 (N) terminals.

Route the motor cable, input power cable and control cables separately. For more information, see section *Routing the cables* on page *34*.

Grounding of the motor cable shield at the motor end

For minimum radio frequency interference:

- ground the cable by twisting the shield as follows: flattened width $\geq$ 1/5 · length
- or ground the cable shield 360 degrees at the lead-through of the motor terminal box.

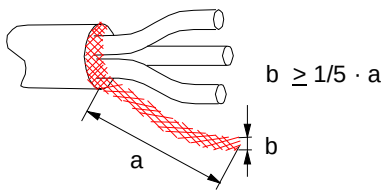

Connection procedure

1. Fasten the input power cable under the grounding clamp. Crimp a cable lug onto the grounding conductor (PE) of the cable and fasten the lug under a grounding clamp screw.
2. Connect the phase conductors to the U1, V1 and W1 terminals. Use a tightening torque of 0.8 N·m (7 lbf·in).

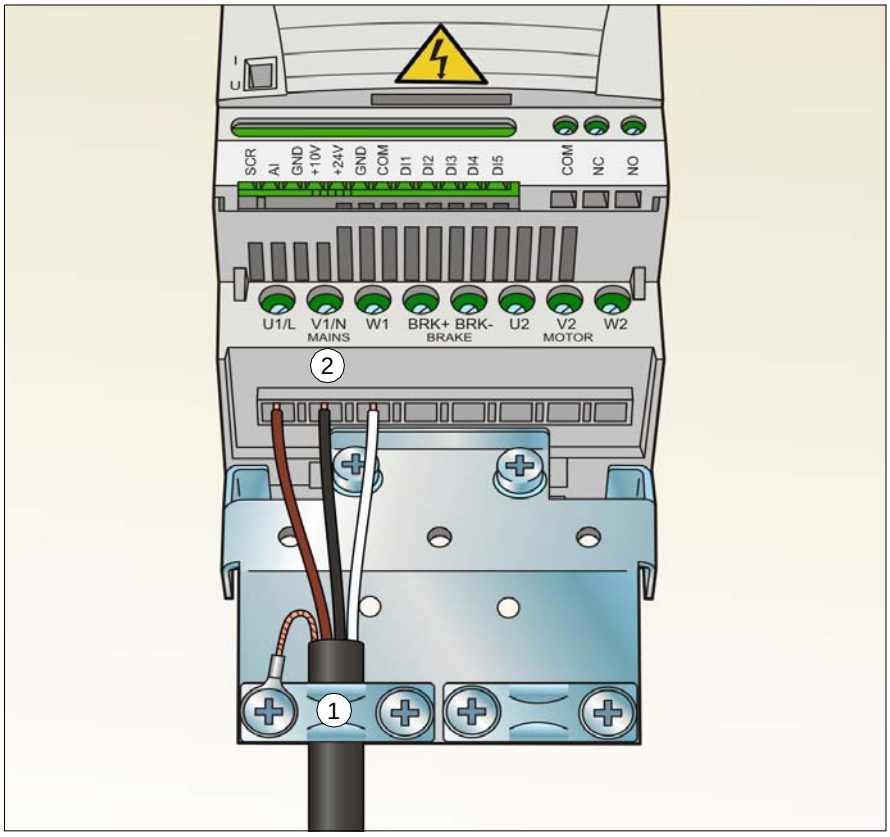

3. Strip the motor cable and twist the shield to form as short a pigtail as possible. Fasten the stripped motor cable under the grounding clamp. Crimp a cable lug onto the pigtail and fasten the lug under a grounding clamp screw.

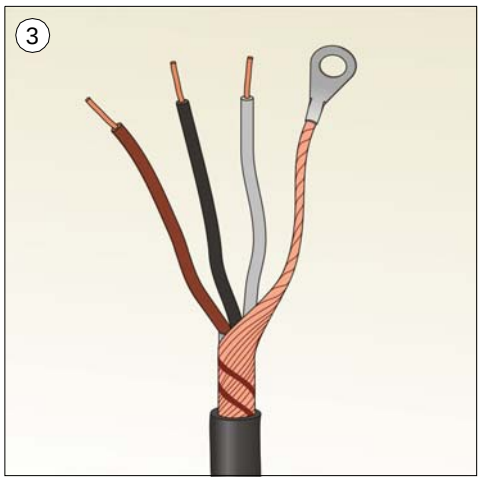

Tightening torque:
0.8 N·m (7 lbf·in)

4. Connect the phase conductors to the U2, V2 and W2 terminals. Use a tightening torque of 0.8 N·m (7 lbf·in).
5. Connect the optional brake resistor to the BRK+ and BRK- terminals with a shielded cable using the same procedure as for the motor cable in the previous step.
6. Secure the cables outside the drive mechanically.

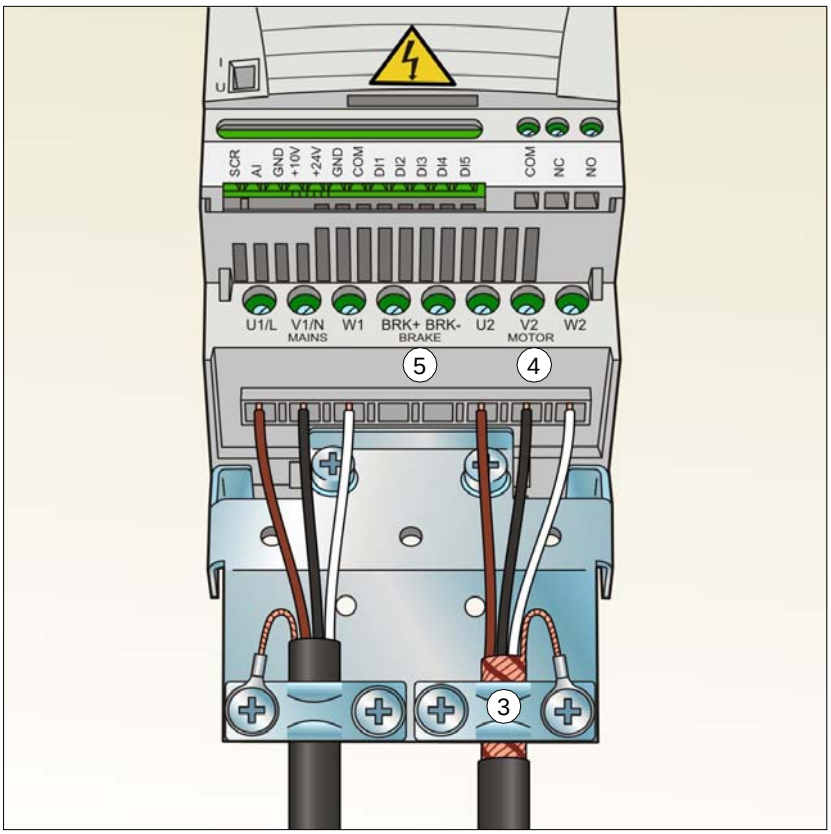

Connecting the control cables

I/O terminals

The figure below shows the I/O terminals.

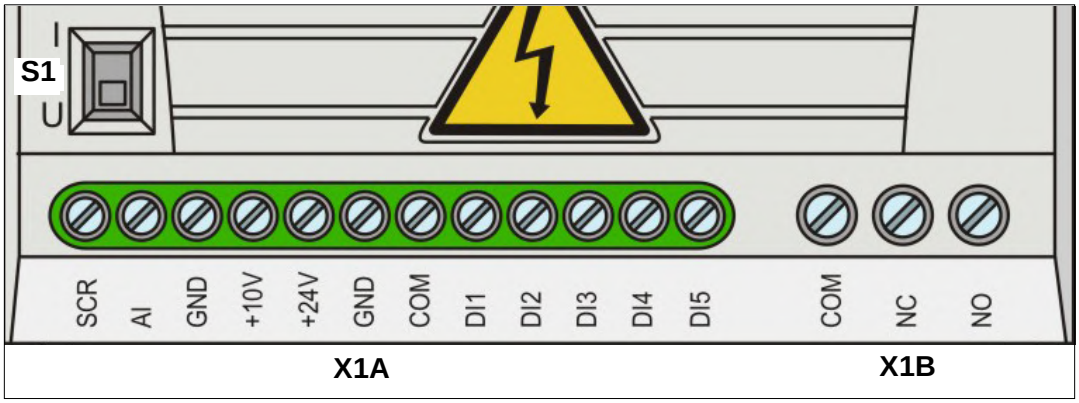

X1A: SCR	X1B: (RO)COM
AI(1)	(RO)NC
GND	(RO)NO
+10 V	
+24 V	
GND	
COM	
DI1	
DI2	
DI3	
DI4	
DI5 digital or frequency input	

The default connection of the control signals depends on the application macro in use, which is selected with parameter *9902* APPLIC MACRO. See chapter *Application macros* on page *69* for the connection diagrams.

Switch S1 selects voltage (0 [2]…10 V) or current (0 [4]…20 mA) as the signal type for analog input AI. By default, switch S1 is in the current position.

Top position: I (0 [4]…20 mA), default for AI

Bottom position: U (0 [2]…10 V)

If DI5 is used as a frequency input, set group *18 FREQ INPUT* parameters accordingly.

PNP and NPN configuration for digital inputs

You can wire the digital input terminals in either a PNP or NPN configuration.

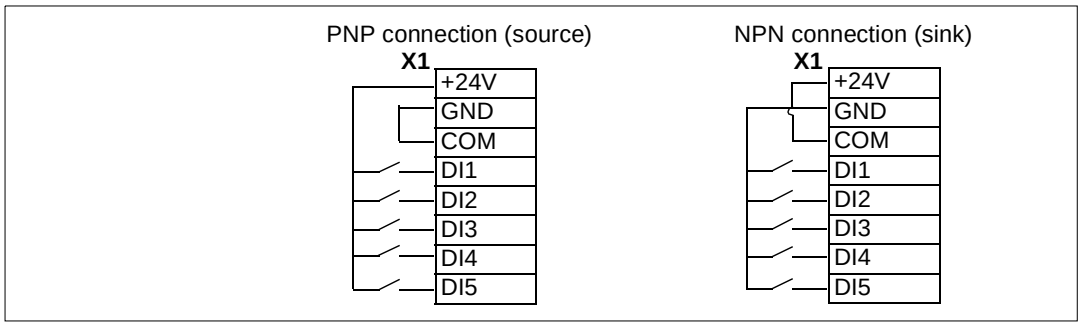

External power supply for digital inputs

For using an external +24 V supply for the digital inputs, see the figure below.

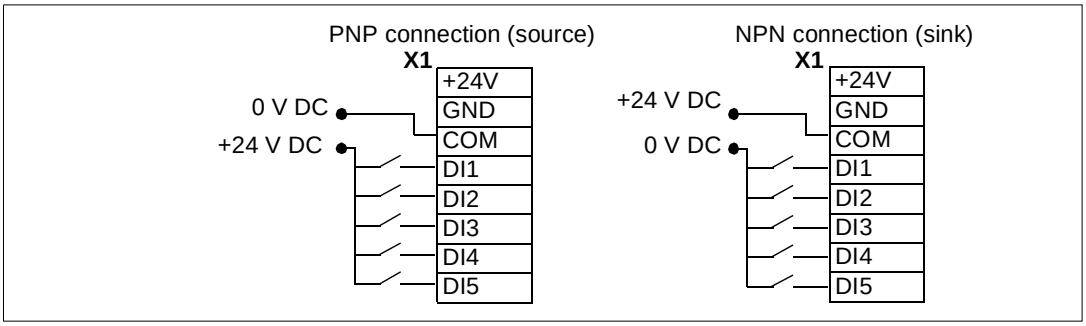

Default I/O connection diagram

The default connection of the control signals depends on the application macro in use, which is selected with parameter *9902* APPLIC MACRO.

The default macro is the ABB standard macro. It provides a general purpose I/O configuration with three constant speeds. Parameter values are the default values given in section *Default parameter values with different macros* on page *79*. For information on other macros, see chapter *Application macros* on page *69*.

The default I/O connections for the ABB standard macro are given in the figure below.

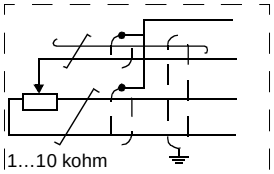

Alternative connection for AI1. If used, switch IU selector to U (0…10 V voltage signal).

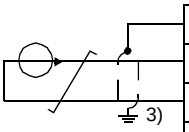

I/O connection [4]

SCR	Signal cable shield (screen)
AI	**Frequency reference**: 0…20 mA
GND	Analog input circuit common
+10V	Reference voltage: +10 V DC, max. 10 mA
+24V	Auxiliary voltage output: +24 V DC, max. 200 mA
GND	Auxiliary voltage output common
COM	Digital input common
DI1	**Stop (0) / Start (1)**
DI2	**Forward (0) / Reverse (1)**
DI3	**Constant speed selection** [1]
DI4	**Constant speed selection** [1]
DI5	**Acceleration and deceleration selection** [2]

Relay connection [5]

COM		Relay output
NC		**No fault [Fault (-1)]**
NO		

1) See parameter group *12 CONSTANT SPEEDS*:

DI3	DI4	Operation (parameter)
0	0	Set speed through integrated potentiometer
1	0	Speed 1 (*1202* CONST SPEED 1)
0	1	Speed 2 (*1203* CONST SPEED 2)
1	1	Speed 3 (*1204* CONST SPEED 3)

2) 0 = ramp times according to parameters *2202* ACCELER TIME 1 and *2203* DECELER TIME 1.
1 = ramp times according to parameters *2205* ACCELER TIME 2 and *2206* DECELER TIME 2.

3) 360 degree grounding under a clamp.

4) Tightening torque: 0.22 N·m / 2 lbf·in

5) Tightening torque: 0.5 N·m / 4.4 lbf·in

Connection procedure

1. *Analog signal (if connected)*: Strip the outer insulation of the analog signal cable 360 degrees and ground the bare shield under the clamp.
2. Connect the conductors to the appropriate terminals.
3. Twist the grounding conductors of the used pairs in the analog signal cable together and connect the bundle to the SCR terminal.

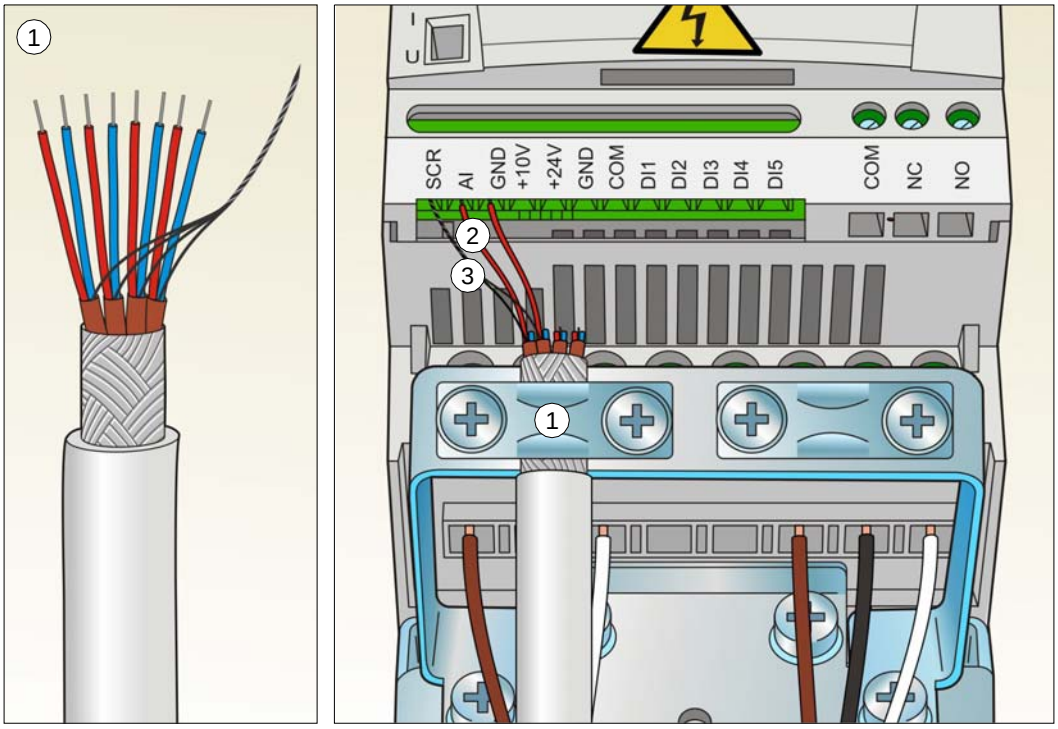

4. *Digital signals*: Strip the outer insulation of the digital signal cable 360 degrees and ground the bare shield under the clamp.
5. Connect the conductors of the cable to the appropriate terminals.
6. Twist the grounding conductors of the used pairs in the digital signal cable together and connect the bundle to the SCR terminal.
7. Secure all analog and digital signal cables outside the drive mechanically.

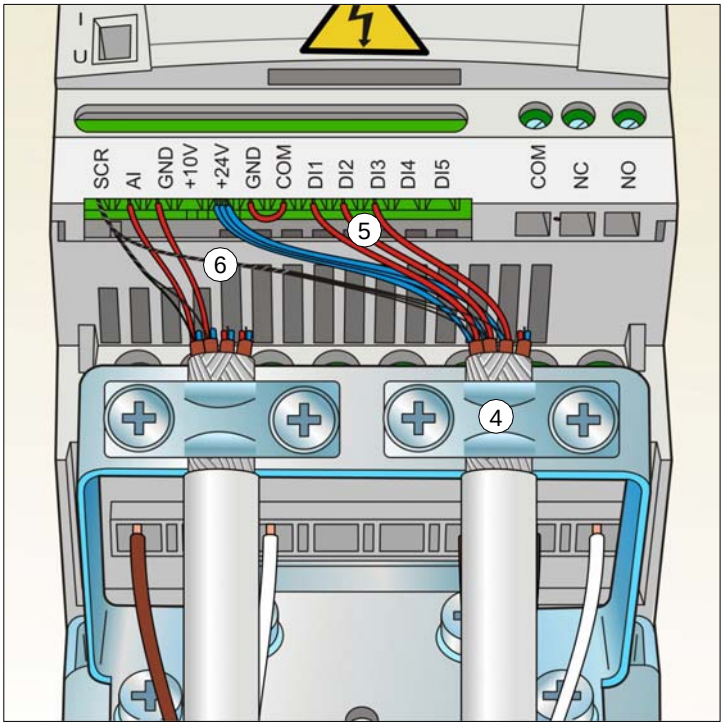

Tightening torque for:
- input signals
  0.22 N·m / 2 lbf·in
- relay outputs
  0.5 N·m / 4.4 lbf·in

Installation checklist

Checking the installation

Check the mechanical and electrical installation of the drive before start-up. Go through the checklist below together with another person. Read chapter *Safety* on page *11* of this manual before you work on the drive.

	Check
MECHANICAL INSTALLATION	
☐	The ambient operating conditions are within allowed limits. (See *Mechanical installation: Checking the installation site* on page *23* as well as *Technical data: Losses, cooling data and noise* on page *144* and *Ambient conditions* on page *149*.)
☐	The drive is fixed properly on an even vertical non-flammable wall. (See *Mechanical installation* on page *23.*)
☐	The cooling air flows freely. (See *Mechanical installation*: *Free space around the drive* on page *23*.)
☐	The motor and the driven equipment are ready for start. (See *Planning the electrical installation: Checking the compatibility of the motor and drive* on page *30* as well as *Technical data*: *Motor connection data* on page *146*.)
ELECTRICAL INSTALLATION (See *Planning the electrical installation* on page *29* and *Electrical installation* on page *39*.)	
☐	For ungrounded and corner-grounded systems: The internal EMC filter is disconnected (screw EMC removed).
☐	The capacitors are reformed if the drive has been stored over a year.
☐	The drive is grounded properly.
☐	The input power voltage matches the drive nominal input voltage.
☐	The input power connections at U1, V1 and W1 are OK and tightened with the correct torque.
☐	Appropriate input power fuses and disconnector are installed.
☐	The motor connections at U2, V2 and W2 are OK and tightened with the correct torque.
☐	The motor cable, input power cable and control cables are routed separately.
☐	The external control (I/O) connections are OK.
☐	The input power voltage cannot be applied to the output of the drive (with a bypass connection).
☐	Terminal cover and, for NEMA 1, hood and connection box, are in place.

Start-up and control with I/O

What this chapter contains

The chapter instructs how to:

- perform the start-up
- start, stop, change the direction of the motor rotation and adjust the speed of the motor through the I/O interface.

Using the control panel to do these tasks is explained briefly in this chapter. For details on how to use the control panel, please refer to chapter *Control panel* on page *57*.

How to start up the drive

WARNING! The start-up may only be carried out by a qualified electrician.

The safety instructions given in chapter *Safety* on page *11* must be followed during the start-up procedure.

The drive starts up automatically at power-up if the external run command is on and the drive is in the remote control mode.

Check that the starting of the motor does not cause any danger. D**e-couple the driven machine** if there is a risk of damage in case of incorrect direction of rotation.

Check the installation. See the checklist in chapter *Installation checklist* on page *49*.

Before you start, ensure that you have the motor nameplate data on hand.

POWER-UP		
☐	Apply input power. The panel powers up into the Output mode.	LOC 0.0 Hz OUTPUT FWD
ENTRY OF START-UP DATA		
☐	Select the application macro (parameter *9902* APPLIC MACRO) according to how the control cables are connected. The default value 1 (ABB STANDARD) is suitable in most cases. The general parameter setting procedure in the Short parameter mode is described below. You can find more detailed instructions on setting parameters on page *65*.	LOC 9902 S PAR FWD

The general parameter setting procedure in the Short parameter mode:

1. To go to the Main menu, press if the bottom line shows OUTPUT; otherwise press repeatedly until you see MENU at the bottom.

LOC rEF MENU FWD

2. Press keys / until you see “PAr S” on the display.

LOC PAr S MENU FWD

3. Press . The display shows a parameter of the Short parameter mode.

LOC 9902 S PAR FWD

4. Find the appropriate parameter with keys / .

LOC 9907 S PAR FWD

5. Press and hold for about two seconds until the parameter value is shown with SET under the value.

LOC 50.0 Hz PAR SET FWD

6. Change the value with keys / . The value changes faster while you keep the key pressed down.

LOC 60.0 Hz PAR SET FWD

7. Save the parameter value by pressing .

LOC 9907 S PAR FWD

☐ Enter the motor data from the motor nameplate:

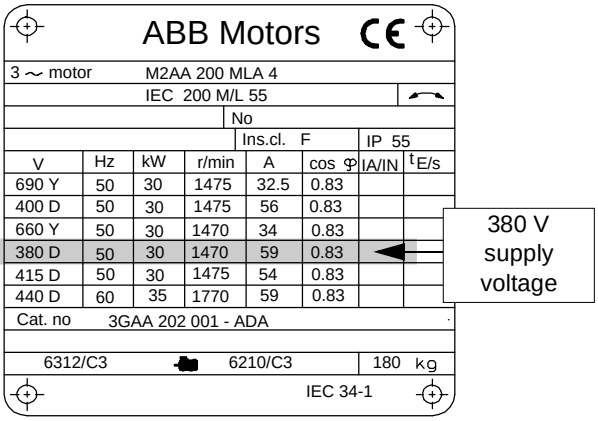

Note: Set the motor data to exactly the same value as on the motor nameplate. Wrong motor settings of parameter group 99 may result in incorrect operation of the drive.

For example, if the motor nominal speed is 1440 rpm on the nameplate, setting the value of parameter *9908* MOTOR NOM SPEED to 1500 rpm results in the wrong operation of the drive.

- motor nominal voltage (parameter *9905* MOTOR NOM VOLT) – follow steps given above, starting from step *4.*

LOC 9905 S PAR FWD

- motor nominal current (parameter *9906* MOTOR NOM CURR)

  Allowed range: 0.2…2.0 · I_{2N} A

LOC 9906 S PAR FWD

	• motor nominal frequency (parameter *9907* MOTOR NOM FREQ)	LOC 9907 S PAR FWD
☐	Set the maximum value for external reference REF1 (parameter *1105* REF1 MAX).	LOC 1105 S PAR FWD
☐	Set constant speeds (drive output frequencies) 1, 2 and 3 (parameters *1202* CONST SPEED 1, *1203* CONST SPEED 2 and *1204* CONST SPEED 3).	LOC 1202 S PAR FWD LOC 1203 S PAR FWD LOC 1204 S PAR FWD
☐	Set the minimum value (%) corresponding to the minimum signal for AI(1) (parameter *1301* MINIMUM AI1).	LOC 1301 S PAR FWD
☐	Set the maximum limit for the drive output frequency (parameter *2008* MAXIMUM FREQ).	LOC 2008 S PAR FWD
☐	Select the motor stop function (parameter *2102* STOP FUNCTION).	LOC 2102 S PAR FWD
	DIRECTION OF THE MOTOR ROTATION	
☐	Check the direction of the motor rotation. • Turn the potentiometer fully counterclockwise. • If the drive is in remote control (REM shown on the left), switch to local control by pressing LOC/REM. • Press ◇ to start the motor. • Turn the potentiometer slightly clockwise until the motor rotates. • Check that the actual direction of the motor is the same as indicated on the display (FWD means forward and REV reverse). • Press ▽ to stop the motor.	LOC 2102 S PAR FWD

	To change the direction of the motor rotation: • Disconnect input power from the drive, and wait 5 minutes for the intermediate circuit capacitors to discharge. Measure the voltage between each input terminal (U1, V1 and W1) and earth with a multimeter to ensure that the drive is discharged. • Exchange the position of two motor cable phase conductors at the drive output terminals or at the motor connection box. • Verify your work by applying input power and repeating the check as described above.	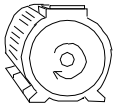 forward direction 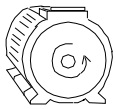 reverse direction
ACCELERATION/DECELERATION TIMES		
☐	Set the acceleration time 1 (parameter *2202* ACCELER TIME 1). **Note:** Set also acceleration time 2 (parameter *2205*) if two acceleration times will be used in the application.	LOC 2202 s PAR FWD
☐	Set the deceleration time 1 (parameter *2203* DECELER TIME 1). **Note:** Set also deceleration time 2 (parameter *2206*) if two deceleration times will be used in the application.	LOC 2203 s PAR FWD
FINAL CHECK		
☐	The start-up is now completed. Check that there are no faults or alarms shown on the display.	
The drive is now ready for use.		

How to control the drive through the I/O interface

The table below instructs how to operate the drive through the digital and analog inputs when:

- the motor start-up is performed, and
- the default (standard) parameter settings are valid.

PRELIMINARY SETTINGS	
If you need to change the direction of rotation, check that parameter *1003* DIRECTION is set to 3 (REQUEST).	
Ensure that the control connections are wired according to the connection diagram given for the ABB standard macro.	See *Default I/O connection diagram* on page *46*.
Ensure that the drive is in remote control. Press key (LOC REM) to switch between remote and local control.	In remote control, the panel display shows text REM.
STARTING AND CONTROLLING THE SPEED OF THE MOTOR	
Start by switching digital input DI1 on. Text FWD starts flashing fast and stops after the setpoint is reached.	REM 0.0 Hz OUTPUT FWD
Regulate the drive output frequency (motor speed) by adjusting the voltage or current of the analog input AI(1).	REM 50.0 Hz OUTPUT FWD
CHANGING THE DIRECTION OF THE MOTOR ROTATION	
Reverse direction: Switch digital input DI2 on.	REM 50.0 Hz OUTPUT REV
Forward direction: Switch digital input DI2 off.	REM 50.0 Hz OUTPUT FWD
STOPPING THE MOTOR	
Switch digital input DI1 off. The motor stops and text FWD starts flashing slowly.	REM 0.0 Hz OUTPUT FWD

Control panel

What this chapter contains

The chapter describes the control panel keys and display fields. It also instructs in using the panel in control, monitoring and changing the settings.

Integrated control panel

The ACS150 works with an integrated control panel, which provides basic tools for manual entry of parameter values.

Overview

The following table summarizes the key functions and displays on the integrated control panel.

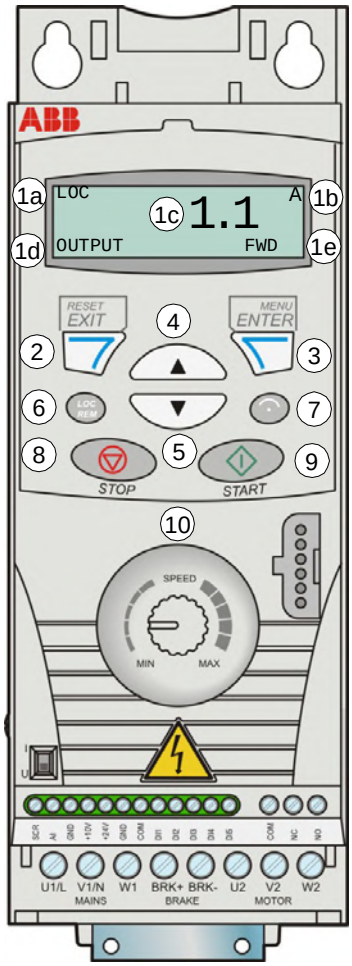

No.	Use
1	LCD display – Divided into five areas: a. Upper left – Control location: LOC: drive control is local, that is, from the control panel REM: drive control is remote, such as the drive I/O. b. Upper right – Unit of the displayed value. s: Short parameter mode, browsing the list of parameters. c. Center – Variable; in general, shows parameter and signal values, menus or lists. Also displays alarm and fault codes. d. Lower left and center – Panel operation state: OUTPUT: Output mode PAR: Steady: Parameter modes Flashing: Changed parameters mode MENU: Main menu. FAULT: Fault mode. e. Lower right – Indicators: FWD (forward) / REV (reverse): direction of the motor rotation Flashing slowly: stopped Flashing quickly: running, not at setpoint Steady: running, at setpoint SET: Displayed value can be modified (in the Parameter or Reference mode).
2	RESET/EXIT – Exits to the next higher menu level without saving changed values. Resets faults in the Output and Fault modes.
3	MENU/ENTER – Enters deeper into menu level. In the Parameter mode, saves the displayed value as the new setting.
4	Up – • Scrolls up through a menu or list. • Increases a value if a parameter is selected. Holding the key down changes the value faster.
5	Down – • Scrolls down through a menu or list. • Decreases a value if a parameter is selected. Holding the key down changes the value faster.
6	LOC/REM – Changes between local and remote control of the drive.
7	DIR – Changes the direction of the motor rotation.
8	STOP – Stops the drive in local control.
9	START – Starts the drive in local control.
10	Potentiometer – Changes the frequency reference.

Operation

You can operate the control panel with the help of menus and keys. You can select an option, for example, an operation mode or a parameter, by scrolling the ▲ and ▼ arrow keys until the option is visible on the display and then pressing the key.

With the key, you can return to the previous operation level without saving the made changes.

The ACS150 includes an integrated potentiometer located at the front of the drive. It is used for setting the frequency reference.

The integrated control panel has six panel modes: *Output mode*, *Reference mode*, *Parameter modes* (Short parameter and Long parameter modes), *Changed parameters mode* and Fault mode. The operation in the first five modes is described in this chapter. When a fault or alarm occurs, the panel goes automatically to the Fault mode showing the fault or alarm code. You can reset the fault or alarm in the Output or Fault mode (see chapter *Fault tracing* on page *127*).

When the power is switched on, the panel is in the Output mode, where you can start, stop, change the direction, switch between local and remote control, monitor up to three actual values (one at a time) and set the frequency reference. To perform other tasks, go first to the Main menu and select the appropriate mode. The figure below shows how to move between the modes.

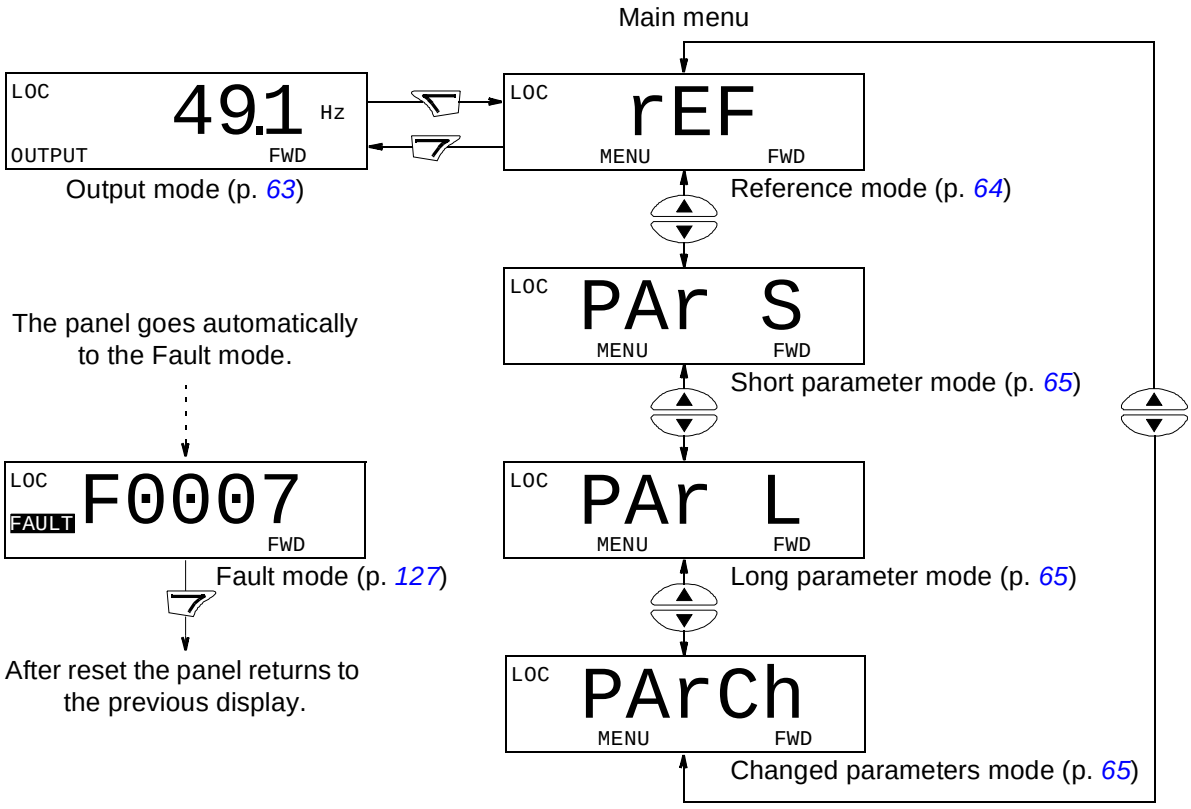

How to perform common tasks

The table below lists common tasks, the mode in which you can perform them and the page number where the steps of the task are described in detail.

Task	Mode	Page
How to switch between local and remote control	Any	61
How to start and stop the drive	Any	61
How to change the direction of the motor rotation	Any	61
How to set the frequency reference	Any	62
How to view and set the frequency reference	Reference	64
How to browse the monitored signals	Output	63
How to change the value of a parameter	Short/Long Parameter	65
How to select the monitored signals	Short/Long Parameter	66
How to view and edit changed parameters	Changed Parameters	67
How to reset faults and alarms	Output, Fault	127

How to start, stop and switch between local and remote control

You can start, stop and switch between local and remote control in any mode. To be able to start or stop the drive, the drive must be in local control.

Step	Action	Display
1.	• To switch between remote control (REM shown on the left) and local control (LOC shown on the left), press (LOC/REM). **Note:** Switching to local control can be disabled with parameter *1606* LOCAL LOCK. After pressing the key, the display briefly shows message “LoC” or “rE”, as appropriate, before returning to the previous display. The very first time the drive is powered up, it is in remote control (REM) and controlled through the drive I/O terminals. To switch to local control (LOC) and control the drive using the control panel and the integrated potentiometer, press (LOC/REM). The result depends on how long you press the key: • If you release the key immediately (the display flashes “LoC”), the drive stops. Set the local control reference with the potentiometer. • If you press the key for about two seconds (release when the display changes from “LoC” to “LoC r”), the drive continues as before, except that the current position of the potentiometer determines the local reference (if there is a great difference between the remote and local references, the transfer from remote to local control is not smooth). The drive copies the current remote value for run/stop status and uses it as the initial local run/stop setting. • To stop the drive in local control, press (⊽) to stop. • To start the drive in local control, press (◇) to start.	LOC 49.1 Hz OUTPUT FWD LOC LoC FWD Text FWD or REV on the bottom line starts flashing slowly. Text FWD or REV on the bottom line starts flashing quickly. It stops flashing when the drive reaches the setpoint.

How to change the direction of the motor rotation

You can change the direction of the motor rotation in any mode.

Step	Action	Display
1.	If the drive is in remote control (REM shown on the left), switch to local control by pressing (LOC/REM). The display briefly shows message “LoC” or “rE”, as appropriate, before returning to the previous display.	LOC 49.1 Hz OUTPUT FWD
2.	To change the direction from forward (FWD shown at the bottom) to reverse (REV shown at the bottom), or vice versa, press (⟲). **Note**: Parameter *1003* DIRECTION must be set to 3 (REQUEST).	LOC 49.1 Hz OUTPUT REV

How to set the frequency reference

You can set the local frequency reference with the integrated potentiometer in any mode when the drive is in local control if parameter *1109* LOC REF SOURCE has the default value 0 (POT).

If parameter *1109* LOC REF SOURCE has been changed to 1 (KEYPAD), so that you can use keys ▲ and ▼ for setting the local reference, you have to do it in the Reference mode (see page *64*).

To view the current local reference, you have to go to the Reference mode.

Step	Action	Display
1.	If the drive is in remote control (REM shown on the left), switch to local control by pressing LOC/REM. The display briefly shows “LoC” before switching to local control. **Note**: With group *11 REFERENCE SELECT*, you can allow changing of the remote (external) reference in remote control (REM) for example, using the integrated potentiometer or keys ▲ and ▼.	LOC PAr S MENU FWD
2.	• To increase the reference value, rotate the integrated potentiometer clockwise. • To decrease the reference value, rotate the integrated potentiometer counterclockwise.	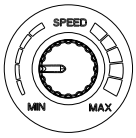

Output mode

In the Output mode, you can:

- monitor actual values of up to three group *01 OPERATING DATA* signals, one signal at a time
- start, stop, change direction, switch between local and remote control and set the frequency reference.

You can transfer to the Output mode by pressing the key until the display shows text OUTPUT at the bottom.

The display shows the value of one group *01 OPERATING DATA* signal. The unit is shown on the right. Page *66* tells how to select up to three signals to be monitored in the Output mode. The table below shows how to view them one at a time.

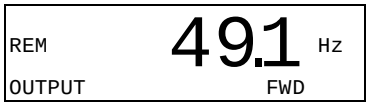

How to browse the monitored signals

Step	Action	Display
1.	If more than one signals have been selected to be monitored (see page *66*), you can browse them in the Output mode. To browse the signals forward, press key ▲ repeatedly. To browse them backward, press key ▼ repeatedly.	REM 49.1 Hz OUTPUT FWD REM 0.5 A OUTPUT FWD REM 10.7 % OUTPUT FWD

Reference mode

In the Reference mode, you can:

- view and set the frequency reference
- start, stop, change direction and switch between local and remote control.

How to view and set the frequency reference

You can set the local frequency reference with the integrated potentiometer in any mode when the drive is in local control if parameter *1109* LOC REF SOURCE has the default value 0 (POT). If parameter *1109* LOC REF SOURCE has been changed to 1 (KEYPAD), you have to set the local frequency reference in the Reference mode.

You can view the current local reference in the Reference mode only.

Step	Action	Display
1.	Go to the Main menu by pressing if you are in the Output mode, otherwise by pressing repeatedly until you see MENU at the bottom.	REM PAr S MENU FWD
2.	If the drive is in remote control (REM shown on the left), switch to local control by pressing LOC/REM. The display briefly shows “LoC” before switching to local control. **Note**: With group *11 REFERENCE SELECT*, you can allow changing of the remote (external) reference in remote control (REM) for example, using the integrated potentiometer or keys ▲ and ▼.	LOC PAr S MENU FWD
3.	If the panel is not in the Reference mode (“rEF” not visible), press key ▲ or ▼ until you see “rEF” and then press . Now the display shows the current reference value with SET under the value.	LOC rEF MENU FWD LOC 49.1 Hz SET FWD
4.	If parameter *1109* LOC REF SOURCE = 0 (POT, default): • To increase the reference value, rotate the integrated potentiometer clockwise. • To decrease the reference value, rotate the integrated potentiometer counterclockwise. The new value (potentiometer setting) is shown on the display. If parameter *1109* LOC REF SOURCE = 1 (KEYPAD): • To increase the reference value, press ▲. • To decrease the reference value, press ▼. The new value is shown on the display.	SPEED MIN MAX LOC 50.0 Hz SET FWD LOC 50.0 Hz SET FWD

Parameter modes

There are two parameter modes: Short parameter mode and Long parameter mode. Both function identically, except that the Short parameter mode shows only the minimum number of parameters typically required to set up the drive (see section *Parameters in the Short parameter mode* on page *80*). The Long parameter mode shows all user parameters including those shown in the Short parameter mode.

In the Parameter modes, you can:

- view and change parameter values
- start, stop, change direction, switch between local and remote control and set the frequency reference.

How to select a parameter and change its value

Step	Action	Display
1.	Go to the Main menu by pressing if you are in the Output mode, otherwise by pressing repeatedly until you see MENU at the bottom.	LOC rEF MENU FWD
2.	If the panel is not in the desired Parameter mode (“PAr S”/“PAr L” not visible), press key or until you see “PAr S” (Short parameter mode) or “PAr L” (Long parameter mode), as appropriate.	LOC PAr S MENU FWD LOC PAr L MENU FWD
3.	Short parameter mode (PAr S): • Press . The display shows one of the parameters of the Short parameter mode. Letter s in the top right corner indicates that you are browsing parameters in the Short parameter mode. Long parameter mode (PAr L): • Press . The display shows the number of one of the parameter groups in the Long parameter mode. • Use keys and to find the desired parameter group. • Press . The display shows one of the parameters in the selected group.	LOC 1202 s PAR FWD LOC -01- PAR FWD LOC -12- PAR FWD LOC 1202 PAR FWD
4.	Use keys and to find the desired parameter.	LOC 1203 PAR FWD
5.	Press and hold for about two seconds until the display shows the value of the parameter with SET underneath indicating that changing of the value is now possible. **Note:** When SET is visible, pressing keys and simultaneously changes the displayed value to the default value of the parameter.	LOC 10.0 Hz PAR SET FWD

Step	Action	Display
6.	Use keys ▲ and ▼ to select the parameter value. When you have changed the parameter value, SET starts flashing. • To save the displayed parameter value, press ⊤. • To cancel the new value and keep the original, press ⊥.	LOC 12.0 Hz PAR SET FWD LOC 1203 PAR FWD

How to select the monitored signals

Step	Action	Display
1.	You can select which signals are monitored in the Output mode and how they are displayed with group *34 PANEL DISPLAY* parameters. See page *65* for detailed instructions on changing parameter values. By default, the display shows: *0103* OUTPUT FREQ, *0104* CURRENT and *0105* TORQUE. To change the default signals, select from group *01 OPERATING DATA* up to three signals to be browsed. Signal 1: Change the value of parameter *3401* SIGNAL1 PARAM to the index of the signal parameter in group *01 OPERATING DATA* (= number of the parameter without the leading zero), for example, 105 means parameter *0105* TORQUE. Value 0 means that no signal is displayed. Repeat for signals 2 (*3408* SIGNAL2 PARAM) and 3 (*3415* SIGNAL3 PARAM). For example, if *3401* SIGNAL1 PARAM = 0 and *3415* SIGNAL3 PARAM = 0, browsing is disabled and only the signal specified by *3408* SIGNAL2 PARAM appears on the display. If all three parameters are set to 0, that is no signals are selected for monitoring, the panel displays text “n.A.”.	LOC 103 PAR SET FWD LOC 104 PAR SET FWD LOC 105 PAR SET FWD
2.	Specify the decimal point location, or use the decimal point location and unit of the source signal (setting 9 [DIRECT]). For details, see parameter *3404* OUTPUT1 DSP FORM. Signal 1: parameter *3404* OUTPUT1 DSP FORM Signal 2: parameter *3411* OUTPUT2 DSP FORM Signal 3: parameter *3418* OUTPUT3 DSP FORM.	LOC 9 PAR SET FWD
3.	Select the units to be displayed for the signals. This has no effect if parameter *3404*/*3411*/*3418* is set to 9 (DIRECT). For details, see parameter *3405* OUTPUT1 UNIT. Signal 1: parameter *3405* OUTPUT1 UNIT Signal 2: parameter *3412* OUTPUT2 UNIT Signal 3: parameter *3419* OUTPUT3 UNIT.	LOC 3 PAR SET FWD
4.	Select the scalings for the signals by specifying the minimum and maximum display values. This has no effect if parameter *3404*/*3411*/*3418* is set to 9 (DIRECT). For details, see parameters *3406* OUTPUT1 MIN and *3407* OUTPUT1 MAX. Signal 1: parameters *3406* OUTPUT1 MIN and *3407* OUTPUT1 MAX Signal 2: parameters *3413* OUTPUT2 MIN and *3414* OUTPUT2 MAX Signal 3: parameters *3420* OUTPUT3 MIN and *3421* OUTPUT3 MAX.	LOC 0.0 Hz PAR SET FWD LOC 500.0 Hz PAR SET FWD

Changed parameters mode

In the Changed parameters mode, you can:

- view a list of all parameters that have been changed from the macro default values
- change these parameters
- start, stop, change direction, switch between local and remote control and set the frequency reference.

How to view and edit changed parameters

Step	Action	Display
1.	Go to the Main menu by pressing if you are in the Output mode, otherwise by pressing repeatedly until you see MENU at the bottom.	LOC rEF MENU FWD
2.	If the panel is not in the Changed parameters mode (“PArCh” not visible), press key ▲ or ▼ until you see “PArCh” and then press . The display shows the number of the first changed parameter and PAR is flashing.	LOC PArCh MENU FWD LOC 1103 PAR FWD
3.	Use keys ▲ and ▼ to find the desired changed parameter on the list.	LOC 1003 PAR FWD
4.	Press and hold for about two seconds until the display shows the value of the parameter with SET underneath indicating that changing of the value is now possible. **Note:** When SET is visible, pressing keys ▲ and ▼ simultaneously changes the displayed value to the default value of the parameter.	LOC 1 PAR SET FWD
5.	Use keys ▲ and ▼ to select the parameter value. When you have changed the parameter value, SET starts flashing. • To save the displayed parameter value, press . • To cancel the new value and keep the original, press .	LOC 2 PAR SET FWD LOC 1003 PAR FWD

Application macros

What this chapter contains

The chapter describes the application macros. For each macro, there is a wiring diagram showing the default control connections (digital and analog I/O). The chapter also explains how to save a user macro and how to recall it.

Overview of macros

Application macros are pre-programmed parameter sets. While starting up the drive, the user selects the macro best suited for the purpose with parameter *9902* APPLIC MACRO, makes the essential changes and saves the result as a user macro.

The ACS150 has six standard macros and three user macros. The table below contains a summary of the macros and describes suitable applications.

Macro	Suitable applications
ABB standard	Ordinary speed control applications where no, one, two or three constant speeds are used. Start/stop is controlled with one digital input (level start and stop). It is possible to switch between two acceleration and deceleration times.
3-wire	Ordinary speed control applications where no, one, two or three constant speeds are used. The drive is started and stopped with push buttons.
Alternate	Speed control applications where no, one, two or three constant speeds are used. Start, stop and direction are controlled by two digital inputs (combination of the input states determines the operation).
Motor potentiometer	Speed control applications where no or one constant speed is used. The speed is controlled by two digital inputs (increase / decrease / keep unchanged).
Hand/Auto	Speed control applications where switching between two control devices is needed. Some control signal terminals are reserved for one device, the rest for the other. One digital input selects between the terminals (devices) in use.
PID control	Process control applications, for example, different closed loop control systems such as pressure control, level control and flow control. It is possible to switch between process and speed control: Some control signal terminals are reserved for process control, others for speed control. One digital input selects between process and speed control.
User	The user can save the customised standard macro, that is the parameter settings, including group *99 START-UP DATA*, into the permanent memory, and recall the data at a later time. For example, three user macros can be used when switching between three different motors is required.

Summary of I/O connections of application macros

The following table gives the summary of the default I/O connections of all application macros.

Input/output	Macro					
	ABB standard	**3-wire**	**Alternate**	**Motor potentiometer**	**Hand/Auto**	**PID control**
AI	Frequency reference	Frequency reference	Frequency reference	-	Frequency ref. (Auto) [1)]	Freq. ref. (Hand) / Proc. ref. (PID)
DI1	Stop/Start	Start (pulse)	Start (forward)	Stop/Start	Stop/Start (Hand)	Stop/Start (Hand)
DI2	Forward/ Reverse	Stop (pulse)	Start (reverse)	Forward/ Reverse	Forward/ Reverse (Hand)	Hand/PID
DI3	Constant speed input 1	Forward/ Reverse	Constant speed input 1	Frequency reference up	Hand/Auto	Constant speed 1
DI4	Constant speed input 2	Constant speed input 1	Constant speed input 2	Frequency reference down	Forward/ Reverse (Auto)	Run enable
DI5	Ramp pair selection	Constant speed input 2	Ramp pair selection	Constant speed 1	Stop/Start (Auto)	Stop/Start (PID)
RO (COM, NC, NO)	Fault (-1)	Fault (-1)	Fault (-1)	Fault (-1)	Fault (-1)	Fault (-1)

[1)] The frequency reference comes from the integrated potentiometer when Hand is selected.

ABB standard macro

This is the default macro. It provides a general purpose I/O configuration with three constant speeds. Parameter values are the default values given in chapter *Actual signals and parameters*, starting from page *79*.

If you use other than the default connections presented below, see section *I/O terminals* on page *44*.

Default I/O connections

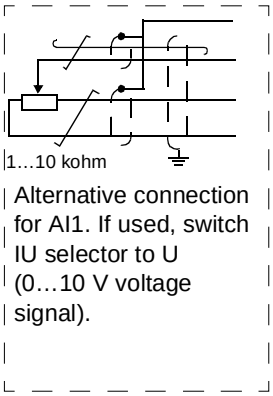

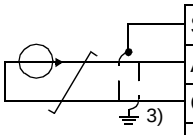

I/O connection [4]

SCR	Signal cable shield (screen)
AI	**Frequency reference**: 0…20 mA
GND	Analog input circuit common
+10V	Reference voltage: +10 V DC, max. 10 mA
+24V	Auxiliary voltage output: +24 V DC, max. 200 mA
GND	Auxiliary voltage output common
COM	Digital input common
DI1	**Stop (0) / Start (1)**
DI2	**Forward (0) / Reverse (1)**
DI3	**Constant speed selection** [1]
DI4	**Constant speed selection** [1]
DI5	**Acceleration and deceleration selection** [2]

Relay connection [5]

COM		Relay output
NC		**No fault [Fault (-1)]**
NO		

[1] See parameter group *12 CONSTANT SPEEDS*:

DI3	DI4	Operation (parameter)
0	0	Set speed through integrated potentiometer
1	0	Speed 1 (*1202* CONST SPEED 1)
0	1	Speed 2 (*1203* CONST SPEED 2)
1	1	Speed 3 (*1204* CONST SPEED 3)

[2] 0 = ramp times according to parameters *2202* ACCELER TIME 1 and *2203* DECELER TIME 1.
1 = ramp times according to parameters *2205* ACCELER TIME 2 and *2206* DECELER TIME 2.

[3] 360 degree grounding under a clamp.

[4] Tightening torque: 0.22 N·m / 2 lbf·in

[5] Tightening torque: 0.5 N·m / 4.4 lbf·in

3-wire macro

This macro is used when the drive is controlled using momentary push-buttons. It provides three constant speeds. To enable the macro, set the value of parameter *9902* APPLIC MACRO to 2 (3-WIRE).

For the parameter default values, see section *Default parameter values with different macros* on page *79*. If you use other than the default connections presented below, see section *I/O terminals* on page *44*.

Note: When the stop input (DI2) is deactivated (no input), the control panel start and stop buttons are disabled.

Default I/O connections

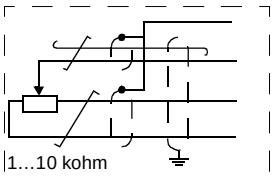

Alternative connection for AI1. If used, switch IU selector to U (0…10 V voltage signal).

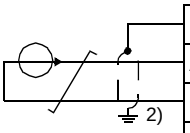

I/O connection [3]

SCR	Signal cable shield (screen)
AI	**Frequency reference**: 0…20 mA
GND	Analog input circuit common
+10V	Reference voltage: +10 V DC, max. 10 mA
+24V	Auxiliary voltage output: +24 V DC, max. 200 mA
GND	Auxiliary voltage output common
COM	Digital input common
DI1	**Start (pulse ⎍)**
DI2	**Stop (pulse ⎍)**
DI3	**Forward (0) / Reverse (1)**
DI4	**Constant speed selection** [1]
DI5	**Constant speed selection** [1]

Relay connection [4]

COM	Relay output
NC	**No fault [Fault (-1)]**
NO	

[1] See parameter group *12 CONSTANT SPEEDS*:

DI3	DI4	Operation (parameter)
0	0	Set speed through integrated potentiometer
1	0	Speed 1 (*1202* CONST SPEED 1)
0	1	Speed 2 (*1203* CONST SPEED 2)
1	1	Speed 3 (*1204* CONST SPEED 3)

[2] 360 degree grounding under a clamp.

[3] Tightening torque: 0.22 N·m / 2 lbf·in

[4] Tightening torque: 0.5 N·m / 4.4 lbf·in

Alternate macro

This macro provides an I/O configuration adapted to a sequence of DI control signals used when alternating the rotation direction of the drive. To enable the macro, set the value of parameter *9902* APPLIC MACRO to 3 (ALTERNATE).

For the parameter default values, see section *Default parameter values with different macros* on page *79*. If you use other than the default connections presented below, see section *I/O terminals* on page *44*.

Default I/O connections

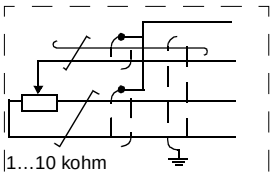

Alternative connection for AI1. If used, switch IU selector to U (0…10 V voltage signal).

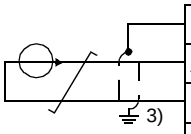

I/O connection [4]

SCR	Signal cable shield (screen)
AI	**Frequency reference**: 0…20 mA
GND	Analog input circuit common
+10V	Reference voltage: +10 V DC, max. 10 mA
+24V	Auxiliary voltage output: +24 V DC, max. 200 mA
GND	Auxiliary voltage output common
COM	Digital input common
DI1	**Start forward**: If DI1 = DI2, the drive stops.
DI2	**Start reverse**
DI3	**Constant speed selection** [1]
DI4	**Constant speed selection** [1]
DI5	**Acceleration and deceleration selection** [2]

Relay connection [5]

COM	Relay output
NC	**No fault [Fault (-1)]**
NO	

[1] See parameter group *12 CONSTANT SPEEDS*:

DI3	DI4	Operation (parameter)
0	0	Set speed through integrated potentiometer
1	0	Speed 1 (*1202* CONST SPEED 1)
0	1	Speed 2 (*1203* CONST SPEED 2)
1	1	Speed 3 (*1204* CONST SPEED 3)

[2] 0 = ramp times according to parameters *2202* ACCELER TIME 1 and *2203* DECELER TIME 1.
1 = ramp times according to parameters *2205* ACCELER TIME 2 and *2206* DECELER TIME 2.

[3] 360 degree grounding under a clamp.

[4] Tightening torque: 0.22 N·m / 2 lbf·in

[5] Tightening torque: 0.5 N·m / 4.4 lbf·in

Motor potentiometer macro

This macro provides a cost-effective interface for PLCs that vary the speed of the drive using only digital signals. To enable the macro, set the value of parameter *9902* APPLIC MACRO to 4 (MOTOR POT).

For the parameter default values, see section *Default parameter values with different macros* on page *79*. If you use other than the default connections presented below, see section *I/O terminals* on page *44*.

Default I/O connections

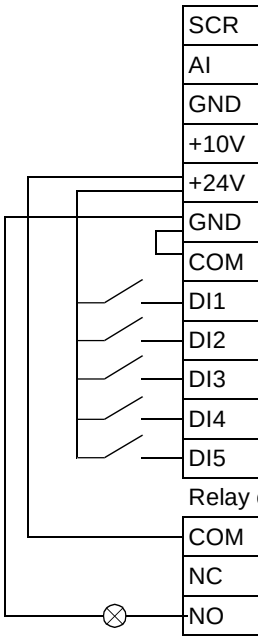

I/O connection [2]

SCR	Signal cable shield (screen)
AI	Not in use by default: 0…20 mA
GND	Analog input circuit common
+10V	Reference voltage: +10 V DC, max. 10 mA
+24V	Auxiliary voltage output: +24 V DC, max. 200 mA
GND	Auxiliary voltage output common
COM	Digital input common
DI1	**Stop (0) / Start (1)**
DI2	**Forward (0) / Reverse (1)**
DI3	**Frequency reference up** [1]
DI4	**Frequency reference down** [1]
DI5	**Constant speed 1**: parameter *1202* CONST SPEED 1

Relay connection [3]

COM	Relay output
NC	**No fault [Fault (-1)]**
NO	

[1] If DI3 and DI4 are both active or inactive, the frequency reference is unchanged.

The existing frequency reference is stored during stop and power down.

[2] Tightening torque: 0.22 N·m / 2 lbf·in

[3] Tightening torque: 0.5 N·m / 4.4 lbf·in

Hand/Auto macro

This macro can be used when switching between two external control devices is needed. To enable the macro, set the value of parameter *9902* APPLIC MACRO to 5 (HAND/AUTO).

For the parameter default values, see section *Default parameter values with different macros* on page *79*. If you use other than the default connections presented below, see section *I/O terminals* on page *44*.

Note: Parameter *2108* START INHIBIT must remain in the default setting 0 (OFF).

Default I/O connections

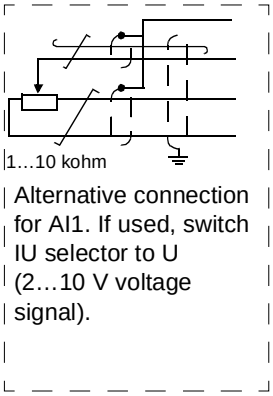

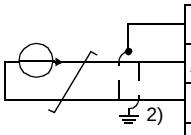

I/O connection [3]

SCR	Signal cable shield (screen)
AI	**Frequency reference (Auto)**: 4…20 mA [1]
GND	Analog input circuit common
+10V	Reference voltage: +10 V DC, max. 10 mA
+24V	Auxiliary voltage output: +24 V DC, max. 200 mA
GND	Auxiliary voltage output common
COM	Digital input common
DI1	**Stop (0) / Start (1) (Hand)**
DI2	**Forward (0) / Reverse (1) (Hand)**
DI3	**Hand (0) / Auto (1) control selection**
DI4	**Forward (0) / Reverse (1) (Auto)**
DI5	**Stop (0) / Start (1) (Auto)**

Relay connection [4]

COM		Relay output
NC		**No fault [Fault (-1)]**
NO		

[1] In the Hand mode, the frequency reference comes from the integrated potentiometer.

[2] 360 degree grounding under a clamp.

[3] Tightening torque: 0.22 N·m / 2 lbf·in

[4] Tightening torque: 0.5 N·m / 4.4 lbf·in

PID control macro

This macro provides parameter settings for closed-loop control systems such as pressure control, flow control, and so on. Control can also be switched to speed control using a digital input. To enable the macro, set the value of parameter *9902* APPLIC MACRO to 6 (PID CONTROL).

For the parameter default values, see section *Default parameter values with different macros* on page *79*. If you use other than the default connections presented below, see chapter *Electrical installation*, section *I/O terminals* on page *44*.

Note: Parameter *2108* START INHIBIT must remain in the default setting 0 (OFF).

Default I/O connections

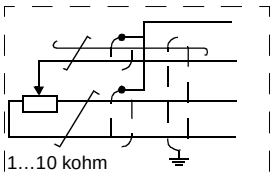

Alternative connection for AI1. If used, switch IU selector to U (2…10 V voltage signal).

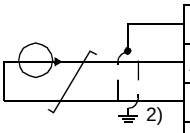

I/O connection [3]

SCR	Signal cable shield (screen)
AI	**Process actual value**: 4…20 mA [1]
GND	Analog input circuit common
+10V	Reference voltage: +10 V DC, max. 10 mA
+24V	Auxiliary voltage output: +24 V DC, max. 200 mA
GND	Auxiliary voltage output common
COM	Digital input common
DI1	**Stop (0) / Start (1) (Hand)**
DI2	**Hand (0) / PID (1) control selection**
DI3	**Constant speed 1**: parameter *1202* CONST SPEED 1
DI4	**Run enable**
DI5	**Stop (0) / Start (1) (PID)**

Relay connection [4]

COM	Relay output
NC	**No fault [Fault (-1)]**
NO	

[1] Hand: frequency reference comes from the integrated potentiometer
PID: Process reference comes from the integrated potentiometer.

[2] 360 degree grounding under a clamp.

[3] Tightening torque: 0.22 N·m / 2 lbf·in

[4] Tightening torque: 0.5 N·m / 4.4 lbf·in

User macros

In addition to the standard application macros, it is possible to create three user macros. The user macro allows the user to save the parameter settings, including group *99 START-UP DATA*, into the permanent memory and recall the data at a later time. The panel reference is also saved if the macro is saved and loaded in local control. The remote control setting is saved into the user macro, but the local control setting is not.

The steps below show how to create and recall User macro 1. The procedure for the other two user macros is identical, only the parameter *9902* APPLIC MACRO values are different.

To create User macro 1:

- Adjust the parameters.
- Save the parameter settings to the permanent memory by changing parameter *9902* APPLIC MACRO to -1 (USER S1 SAVE).
- Press MENU ENTER to save.

To recall User macro 1:

- Change parameter *9902* APPLIC MACRO to 0 (USER S1 LOAD).
- Press MENU ENTER to load.

Note: User macro load restores the parameter settings including group *99 START-UP DATA.* Check that the settings correspond to the motor used.

Hint: The user can for example switch the drive between three motors without having to adjust the motor parameters every time the motor is changed. The user needs only to adjust the settings once for each motor and then to save the data as three user macros. When the motor is changed, only the corresponding user macro needs to be loaded, and the drive is ready to operate.

Actual signals and parameters

What this chapter contains

The chapter describes the actual signals and parameters. It also contains a table of the default values for the different macros.

Terms and abbreviations

Term	Definition
Actual signal	Signal measured or calculated by the drive. Can be monitored by the user. No user setting possible. Groups 01...04 contain actual signals.
Def	Parameter default value
Parameter	A user-adjustable operation instruction of the drive. Groups 10...99 contain parameters.
E	Refers to types 01E- and 03E- with European parametrization
U	Refers to types 01U- and 03U- with US parametrization

Default parameter values with different macros

When application macro is changed (*9902* APPLIC MACRO), the software updates the parameter values to their default values. The following table includes the parameter default values for different macros. For other parameters, the default values are the same for all macros (see section *Actual signals* on page *84*).

Index	Name/ Selection	ABB STANDARD	3-WIRE	ALTERNATE	MOTOR POT	HAND/AUTO	PID CONTROL
1001	EXT1 COMMANDS	2 = DI1,2	4 = DI1P,2P,3	9 = DI1F,2R	2 = DI1,2	2 = DI1,2	1 = DI1
1002	EXT2 COMMANDS	0 = NOT SEL	0 = NOT SEL	0 = NOT SEL	0 = NOT SEL	21 = DI5,4	20 = DI5
1003	DIRECTION	3 = REQUEST	3 = REQUEST	3 = REQUEST	3 = REQUEST	3 = REQUEST	1 = FORWARD
1102	EXT1/EXT2 SEL	0 = EXT1	0 = EXT1	0 = EXT1	0 = EXT1	3 = DI3	2 = DI2
1103	REF1 SELECT	1 = AI1	1 = AI1	1 = AI1	12 = DI3U,4D(NC)	1 = AI1	2 = POT
1106	REF2 SELECT	2 = POT	2 = POT	2 = POT	1 = AI1	2 = POT	19 = PID1OUT
1201	CONST SPEED SEL	9 = DI3,4	10 = DI4,5	9 = DI3,4	5 = DI5	0 = NOT SEL	3 = DI3
1301	MINIMUM AI1	0.0%	0.0%	0.0%	0.0%	20.0%	20.0%
1601	RUN ENABLE	0 = NOT SEL	0 = NOT SEL	0 = NOT SEL	0 = NOT SEL	0 = NOT SEL	4 = DI4
2201	ACC/DEC 1/2 SEL	5 = DI5	0 = NOT SEL	5 = DI5	0 = NOT SEL	0 = NOT SEL	0 = NOT SEL
9902	APPLIC MACRO	1 = ABB STANDARD	2 = 3-WIRE	3 = ALTERNATE	4 = MOTOR POT	5 = HAND/ AUTO	6 = PID CONTROL

Parameters in the Short parameter mode

The following table describes the parameters that are visible in the Short parameter mode. See section *Parameter modes* on page *65* for how to select the parameter mode. All parameters are presented in detail in section *Parameters in the Long parameter mode*, starting on page *86*.

Parameters in the Short parameter mode			
No.	**Name/Value**	**Description**	**Def**
99 START-UP DATA		Application macro. Definition of motor set-up data.	
9902	APPLIC MACRO	Selects the application macro or activates FlashDrop parameter values. See chapter *Application macros* on page *69*.	1 = ABB STANDARD
	1 = ABB STANDARD	Standard macro for constant speed applications	
	2 = 3-WIRE	3-wire macro for constant speed applications	
	3 = ALTERNATE	Alternate macro for start forward and start reverse applications	
	4 = MOTOR POT	Motor potentiometer macro for digital signal speed control applications	
	5 = HAND/AUTO	Hand/Auto macro to be used when two control devices are connected to the drive: - Device 1 communicates through the interface defined by external control location EXT1. - Device 2 communicates through the interface defined by external control location EXT2. EXT1 or EXT2 is active at a time. Switching between EXT1/2 through digital input.	
	6 = PID CONTROL	PID control. For applications in which the drive controls a process value. For example, pressure control by the drive running the pressure boost pump. Measured pressure and the pressure reference are connected to the drive.	
	31 = LOAD FD SET	FlashDrop parameter values as defined by the FlashDrop file. FlashDrop is an optional device for fast copying of parameters to unpowered drives. FlashDrop allows easy customisation of the parameter list, for example, selected parameters can be hidden. For more information, see *MFDT-01 FlashDrop user's manual* (3AFE68591074 [English]).	
	0 = USER S1 LOAD	User 1 macro loaded into use. Before loading, check that the saved parameter settings and the motor model are suitable for the application.	
	-1 = USER S1 SAVE	Save User 1 macro. Stores the current parameter settings and the motor model.	
	-2 = USER S2 LOAD	User 2 macro loaded into use. Before loading, check that the saved parameter settings and the motor model are suitable for the application.	
	-3 = USER S2 SAVE	Save User 2 macro. Stores the current parameter settings and the motor model.	
	-4 = USER S3 LOAD	User 3 macro loaded into use. Before loading, check that the saved parameter settings and the motor model are suitable for the application.	
	-5 = USER S3 SAVE	Save User 3 macro. Stores the current parameter settings and the motor model.	

Parameters in the Short parameter mode			
No.	**Name/Value**	**Description**	**Def**
9905	MOTOR NOM VOLT	Defines the nominal motor voltage. Must be equal to the value on the motor rating plate. The drive cannot supply the motor with a voltage greater than the input power voltage. Note that the output voltage is not limited by the nominal motor voltage but increased linearly up to the value of the input voltage 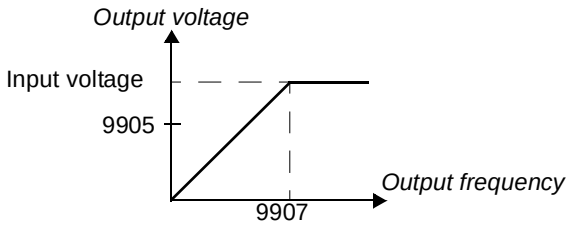 **WARNING!** Never connect a motor to a drive which is connected to power line with voltage level higher than the rated motor voltage.	200 V E units: 200 V 230 V U units: 230 V 400 V E units: 400 V 460 V U units: 460 V
	200 V E units/ 230 U units: 100...300 V 400 V E units / 460 V U units: 230...690 V	Voltage. **Note:** The stress on the motor insulations is always dependent on the drive supply voltage. This also applies to the case where the motor voltage rating is lower than the rating of the drive and the supply of the drive.	
9906	MOTOR NOM CURR	Defines the nominal motor current. Must be equal to the value on the motor rating plate.	I_{2N}
	0.2…2.0 · I_{2N}	Current	
9907	MOTOR NOM FREQ	Defines the nominal motor frequency, that is the frequency at which the output voltage equals the motor nominal voltage: Field weakening point = Nom. frequency · Supply voltage / Mot nom. voltage	E: 50 / U: 60
	10.0…500.0 Hz	Frequency	
04 FAULT HISTORY		Fault history (read-only)	
0401	LAST FAULT	Fault code of the latest fault. See chapter *Fault tracing* on page *127* for the codes. 0 = fault history is clear (on panel display = NO RECORD).	-
11 REFERENCE SELECT		Maximum reference	
1105	REF1 MAX	Defines the maximum value for external reference REF1. Corresponds to maximum mA/(V) signal for analog input AI1. 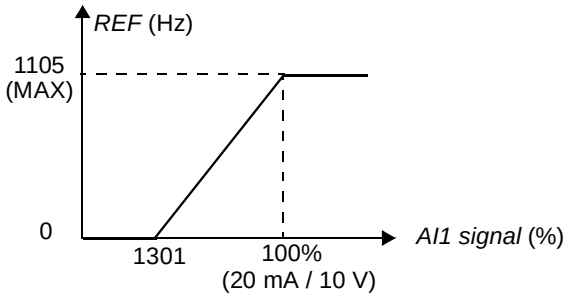 	E: 50.0 Hz / U: 60.0 Hz
	0.0…500.0 Hz	Maximum value	

Parameters in the Short parameter mode			
No.	**Name/Value**	**Description**	**Def**
12 CONSTANT SPEEDS		Constant speeds. Constant speed activation overrides the external speed reference. Constant speed selections are ignored if drive is in the local control mode. As default constant speed selection is made through digital inputs DI3 and DI4.1 = DI active, 0 = DI inactive. **DI3 / DI4 / Operation** 0 / 0 / No constant speed 1 / 0 / Speed defined by parameter *1202* CONST SPEED 1 0 / 1 / Speed defined by parameter *1203* CONST SPEED 2 1 / 1 / Speed defined by parameter *1204* CONST SPEED 3	
1202	CONST SPEED 1	Defines constant speed 1 (that is drive output frequency).	E: 5.0 Hz / U: 6.0 Hz
	0.0…500.0 Hz	Output frequency	
1203	CONST SPEED 2	Defines constant speed 2 (that is drive output frequency).	E: 10.0 Hz / U: 12.0 Hz
	0.0…500.0 Hz	Output frequency	
1204	CONST SPEED 3	Defines constant speed 3 (that is drive output frequency).	E: 15.0 Hz / U: 18.0 Hz
	0.0…500.0 Hz	Output frequency	
13 ANALOG INPUTS		Analog input signal minimum	
1301	MINIMUM AI1	Defines the minimum % value that corresponds to minimum mA/(V) signal for analog input AI1. 0...20 mA ≙ 0...100% 4...20 mA ≙ 20...100% When analog input AI1 is selected as the source for external reference REF1, the value corresponds to the minimum reference value, that is 0 Hz. See the figure for parameter *1105* REF1 MAX.	0%
	0…100.0%	Value in percent of the full signal range. Example: If the minimum value for analog input is 4 mA, the percent value for 0…20 mA range is: (4 mA / 20 mA) · 100% = 20%	
20 LIMITS		Maximum frequency	
2008	MAXIMUM FREQ	Defines the maximum limit for the drive output frequency. 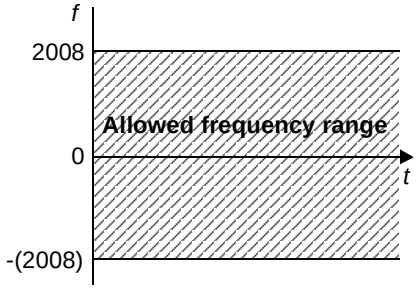 	E: 50.0 Hz / U: 60.0 Hz
	0.0…500.0 Hz	Maximum frequency	
21 START/STOP		Stop mode of the motor	
2102	STOP FUNCTION	Selects the motor stop function.	1 = COAST
	1 = COAST	Stop by cutting off the motor power supply. The motor coasts to stop.	
	2 = RAMP	Stop along a linear ramp. See parameter group *22 ACCEL/DECEL*.	

Parameters in the Short parameter mode			
No.	**Name/Value**	**Description**	**Def**
22 ACCEL/DECEL		Acceleration and deceleration times	
2202	ACCELER TIME 1	Defines the acceleration time 1, that is the time required for the speed to change from zero to the speed defined by parameter *2008* MAXIMUM FREQ. - If the speed reference increases faster than the set acceleration rate, the motor speed follows the acceleration rate. - If the speed reference increases slower than the set acceleration rate, the motor speed follows the reference signal. - If the acceleration time is set too short, the drive automatically prolongs the acceleration in order not to exceed the drive operating limits.	5.0 s
	0.0…1800.0 s	Time	
2203	DECELER TIME 1	Defines the deceleration time 1, that is the time required for the speed to change from the value defined by parameter *2008* MAXIMUM FREQ to zero. - If the speed reference decreases slower than the set deceleration rate, the motor speed follows the reference signal. - If the reference changes faster than the set deceleration rate, the motor speed follows the deceleration rate. - If the deceleration time is set too short, the drive automatically prolongs the deceleration in order not to exceed drive operating limits. If a short deceleration time is needed for a high inertia application, the drive should be equipped a brake resistor.	5.0 s
	0.0…1800.0 s	Time	

Actual signals

The following table includes the descriptions of all actual signal.

Actual signals		
No.	**Name/Value**	**Description**
01 OPERATING DATA		Basic signals for monitoring the drive (read-only). For actual signal supervision, see parameter group *32 SUPERVISION*. For selection of an actual signal to be displayed on the control panel, see parameter group *34 PANEL DISPLAY*.
0101	SPEED & DIR	Calculated motor speed in rpm. A negative value indicates reverse direction.
0102	SPEED	Calculated motor speed in rpm.
0103	OUTPUT FREQ	Calculated drive output frequency in Hz. (Shown by default on the panel Output mode display.)
0104	CURRENT	Measured motor current in A
0105	TORQUE	Calculated motor torque in percent of the motor nominal torque
0106	POWER	Measured motor power in kW
0107	DC BUS VOLTAGE	Measured intermediate circuit voltage in V DC
0109	OUTPUT VOLTAGE	Calculated motor voltage in V AC
0110	DRIVE TEMP	Measured IGBT temperature in °C
0111	EXTERNAL REF 1	External reference REF1 in Hz
0112	EXTERNAL REF 2	External reference REF2 in percent. 100% equals the maximum motor speed.
0113	CTRL LOCATION	Active control location. (0) LOCAL; (1) EXT1; (2) EXT2.
0114	RUN TIME (R)	Elapsed drive running time counter (hours). Runs when the drive is modulating. The counter can be reset by pressing the UP and DOWN keys simultaneously when the control panel is in the Parameter mode.
0115	KWH COUNTER (R)	kWh counter. The counter value is accumulated till it reaches 65535 after which the counter rolls over and starts again from 0. The counter can be reset by pressing UP and DOWN keys simultaneously when the control panel is in the Parameter mode.
0120	AI 1	Relative value of analog input AI1 in percent
0121	POT	Potentiometer value in percent
0126	PID 1 OUTPUT	Output value of the process PID1 controller in percent
0128	PID 1 SETPNT	Setpoint signal (reference) for the process PID1 controller. Unit depends on parameter *4006* UNITS and *4007* UNIT SCALE settings.
0130	PID 1 FBK	Feedback signal for the process PID1 controller. Unit depends on parameter *4006* UNITS and *4007* UNIT SCALE settings.
0132	PID 1 DEVIATION	Deviation of the process PID1 controller, that is the difference between the reference value and the actual value. Unit depends on parameter *4006* UNITS and *4007* UNIT SCALE.
0137	PROCESS VAR 1	Process variable 1 defined by parameter group *34 PANEL DISPLAY*
0138	PROCESS VAR 2	Process variable 2 defined by parameter group *34 PANEL DISPLAY*
0139	PROCESS VAR 3	Process variable 3 defined by parameter group *34 PANEL DISPLAY*
0140	RUN TIME	Elapsed drive running time counter (thousands of hours). Runs when the drive is modulating. Counter cannot be reset.
0141	MWH COUNTER	MWh counter. The counter value is accumulated till it reaches 65535 after which the counter rolls over and starts again from 0. Cannot be reset.

Actual signals		
No.	**Name/Value**	**Description**
0142	REVOLUTION CNTR	Motor revolution counter (millions of revolutions). The counter can be reset by pressing the UP and DOWN keys simultaneously when the control panel is in the Parameter mode.
0143	DRIVE ON TIME HI	Drive control board power-on time in days. Counter cannot be reset.
0144	DRIVE ON TIME LO	Drive control board power-on time in 2 second ticks (30 ticks = 60 seconds). Counter cannot be reset.
0160	DI 1-5 STATUS	Status of digital inputs. Example: 10000 = DI1 is on, DI2...DI5 are off.
0161	PULSE INPUT FREQ	Value of frequency input in Hz
0162	RO STATUS	Status of relay output. 1 = RO is energized, 0 = RO is de-energized.
04 FAULT HISTORY		Fault history (read-only)
0401	LAST FAULT	Fault code of the latest fault. See chapter *Fault tracing* on page *127* for the codes. 0 = fault history is clear (on panel display = NO RECORD).
0402	FAULT TIME 1	Day on which the latest fault occurred. Format: The number of days elapsed after power-on.
0403	FAULT TIME 2	Time at which the latest fault occurred. Format: Time elapsed after power-on in 2 second ticks (minus the whole days stated by signal *0402* FAULT TIME 1). 30 ticks = 60 seconds. For example, value 514 equals 17 minutes and 8 seconds (= 514/30).
0404	SPEED AT FLT	Motor speed in rpm at the time the latest fault occurred
0405	FREQ AT FLT	Frequency in Hz at the time the latest fault occurred
0406	VOLTAGE AT FLT	Intemediate circuit voltage in V DC at the time the latest fault occurred
0407	CURRENT AT FLT	Motor current in A at the time the latest fault occurred
0408	TORQUE AT FLT	Motor torque in percent of the motor nominal torque at the time the latest fault occurred
0409	STATUS AT FLT	Drive status in hexadecimal format at the time the latest fault occurred
0412	PREVIOUS FAULT 1	Fault code of the 2nd latest fault. See chapter *Fault tracing* on page *127* for the codes.
0413	PREVIOUS FAULT 2	Fault code of the 3rd latest fault. See chapter *Fault tracing* on page *127* for the codes.
0414	DI 1-5 AT FLT	Status of digital inputs DI1…5 at the time the latest fault occurred. Example: 10000 = DI1 is on, DI2...DI5 are off.

Parameters in the Long parameter mode

The following table includes the complete descriptions of all parameters that are visible only in the Long parameter mode. See section *Parameter modes* on page *65* for how to select the parameter mode.

Parameters in the Long parameter mode			
Index	**Name/Selection**	**Description**	**Def**
10 START/STOP/DIR		The sources for external start, stop and direction control	
1001	EXT1 COMMANDS	Defines the connections and the source for the start, stop and direction commands for external control location 1 (EXT1).	2 = DI1,2
	0 = NOT SEL	No start, stop and direction command source	
	1 = DI1	Start and stop through digital input DI1. 0 = stop, 1 = start. Direction is fixed according to parameter *1003* DIRECTION (setting REQUEST = FORWARD).	
	2 = DI1,2	Start and stop through digital input DI1. 0 = stop, 1 = start. Direction through digital input DI2. 0 = forward, 1 = reverse. To control direction, parameter *1003* DIRECTION setting must be 3 (REQUEST).	
	3 = DI1P,2P	Pulse start through digital input DI1. 0 -> 1: Start. (In order to start the drive, digital input DI2 must be activated prior to the pulse fed to DI1.) Pulse stop through digital input DI2. 1 -> 0: Stop. Direction of rotation is fixed according to parameter *1003* DIRECTION (setting REQUEST = FORWARD). **Note:** When the stop input (DI2) is deactivated (no input), the control panel start and stop keys are disabled.	
	4 = DI1P,2P,3	Pulse start through digital input DI1. 0 -> 1: Start. (In order to start the drive, digital input DI2 must be activated prior to the pulse fed to DI1.) Pulse stop through digital input DI2. 1 -> 0: Stop. Direction through digital input DI3. 0 = forward, 1 = reverse. To control direction, parameter *1003* DIRECTION setting must be 3 (REQUEST). **Note:** When the stop input (DI2) is deactivated (no input), the control panel start and stop keys are disabled.	
	5 = DI1P,2P,3P	Pulse start forward through digital input DI1. 0 -> 1: Start forward. Pulse start reverse through digital input DI2. 0 -> 1: Start reverse. (In order to start the drive, digital input DI3 must be activated prior to the pulse fed to DI1/DI2). Pulse stop through digital input DI3. 1 -> 0: Stop. To control the direction, parameter *1003* DIRECTION setting must be 3 (REQUEST). **Note:** When the stop input (DI3) is deactivated (no input), the control panel start and stop keys are disabled.	
	8 = KEYPAD	Start, stop and direction commands through control panel when EXT1 is active. To control the direction, parameter *1003* DIRECTION setting must be 3 (REQUEST).	
	9 = DI1F,2R	Start, stop and direction commands through digital inputs DI1 and DI2. **DI1 / DI2 / Operation** 0 / 0 / Stop 1 / 0 / Start forward 0 / 1 / Start reverse 1 / 1 / Stop Parameter *1003* DIRECTION setting must be 3 (REQUEST).	
	20 = DI5	Start and stop through digital input DI5. 0 = stop, 1 = start. Direction is fixed according to parameter *1003* DIRECTION (setting REQUEST = FORWARD).	
	21 = DI5,4	Start and stop through digital input DI5. 0 = stop, 1 = start. Direction through digital input DI4. 0 = forward, 1 = reverse. To control direction, parameter *1003* DIRECTION setting must be 3 (REQUEST).	

Parameters in the Long parameter mode			
Index	**Name/Selection**	**Description**	**Def**
1002	EXT2 COMMANDS	Defines the connections and the source for the start, stop and direction commands for external control location 2 (EXT2).	0 = NOT SEL
		See parameter *1001* EXT1 COMMANDS.	
1003	DIRECTION	Enables the control of rotation direction of the motor, or fixes the direction.	3 = REQUEST
	1 = FORWARD	Fixed to forward	
	2 = REVERSE	Fixed to reverse	
	3 = REQUEST	Control of rotation direction allowed	

Parameters in the Long parameter mode			
Index	**Name/Selection**	**Description**	**Def**
1010	JOGGING SEL	Defines the signal that activates the jogging function. The jogging function is typically used to control a cyclical movement of a machine section. One push button controls the drive through the whole cycle: When it is on, the drive starts, accelerates to a preset speed at a preset rate. When it is off, the drive decelerates to zero speed at a preset rate. The figure below describes the operation of the drive. It also represent how the drive shifts to normal operation (= jogging inactive) when the drive start command is switched on. Jog cmd = state of the jogging input, Start cmd = state of the drive start command. 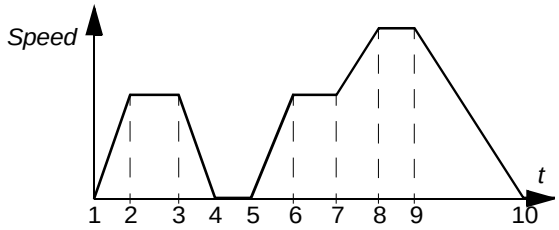 **Note:** The jogging is not operational when the drive start command is on. **Note:** The jogging speed overrides the constant speeds (*12 CONSTANT SPEEDS*). **Note:** The ramp shape time (*2207* RAMP SHAPE 2) must be set to zero during jogging (that is, linear ramp). Jogging speed is defined by parameter *1208* CONST SPEED 7, acceleration and deceleration times are defined by parameters *2205* ACCELER TIME 2 and *2206* DECERLER TIME 2. See also parameter *2112* ZERO SPEED DELAY.	0 = NOT SEL
	1 = DI1	Digital input DI1. 0 = jogging inactive, 1 = jogging active.	
	2 = DI2	See selection DI1.	
	3 = DI3	See selection DI1.	
	4 = DI4	See selection DI1.	
	5 = DI5	See selection DI1.	

Phase	Jog cmd	Start cmd	Description
1-2	1	0	Drive accelerates to the jogging speed along the acceleration ramp of the jogging function.
2-3	1	0	Drive runs at the jogging speed.
3-4	0	0	Drive decelerates to zero speed along the deceleration ramp of the jogging function.
4-5	0	0	Drive is stopped.
5-6	1	0	Drive accelerates to the jogging speed along the acceleration ramp of the jogging function.
6-7	1	0	Drive runs at the jogging speed.
7-8	x	1	Normal operation overrides the jogging. Drive accelerates to the speed reference along the active acceleration ramp.
8-9	x	1	Normal operation overrides the jogging. Drive follows the speed reference.
9-10	0	0	Drive decelerates to zero speed along the active deceleration ramp.
10-	0	0	Drive is stopped.
x = State can be either 1 or 0.			

Parameters in the Long parameter mode			
Index	**Name/Selection**	**Description**	**Def**
	0 = NOT SEL	Not selected	
	-1 = DI1(INV)	Inverted digital input DI1. 1 = jogging inactive, 0 = jogging active.	
	-2 = DI2(INV)	See selection DI1(INV).	
	-3 = DI3(INV)	See selection DI1(INV).	
	-4 = DI4(INV)	See selection DI1(INV).	
	-5 = DI5(INV)	See selection DI1(INV).	
11 REFERENCE SELECT		Panel reference type, local reference source, external control location selection and external reference sources and limits The drive can accept a variety of references in addition to the conventional analog input, potentiometer and control panel signals: - The drive reference can be given with two digital inputs: One digital input increases the speed, the other decreases it. - The drive can form a reference out of analog input and potentiometer signals by using mathematical functions: Addition, subtraction. - The drive reference can be given with a frequency input. It is possible to scale the external reference so that the signal minimum and maximum values correspond to a speed other than the minimum and maximum speed limits.	
1101	KEYPAD REF SEL	Selects the type of the reference in the local control mode.	1 = REF1
	1 = REF1(Hz)	Frequency reference	
	2 = REF2(%)	%-reference	
1102	EXT1/EXT2 SEL	Defines the source from which the drive reads the signal that selects between two external control locations, EXT1 or EXT2.	0 = EXT1
	0 = EXT1	EXT1 active. The control signal sources are defined by parameters *1001* EXT1 COMMANDS and *1103* REF1 SELECT.	
	1 = DI1	Digital input DI1. 0 = EXT1, 1 = EXT2.	
	2 = DI2	See selection DI1.	
	3 = DI3	See selection DI1.	
	4 = DI4	See selection DI1.	
	5 = DI5	See selection DI1.	
	7 = EXT2	EXT2 active. The control signal sources are defined by parameters *1002* EXT2 COMMANDS and *1106* REF2 SELECT.	
	-1 = DI1(INV)	Inverted digital input DI1. 1 = EXT1, 0 = EXT2.	
	-2 = DI2(INV)	See selection DI1(INV).	
	-3 = DI3(INV)	See selection DI1(INV).	
	-4 = DI4(INV)	See selection DI1(INV).	
	-5 = DI5(INV)	See selection DI1(INV).	
1103	REF1 SELECT	Selects the signal source for external reference REF1.	1 = AI1
	0 = KEYPAD	Control panel	
	1 = AI1	Analog input AI1	
	2 = POT	Potentiometer	

Parameters in the Long parameter mode			
Index	**Name/Selection**	**Description**	**Def**
	3 = AI1/JOYST	Analog input AI1 as joystick. The minimum input signal runs the motor at the maximum reference in the reverse direction, the maximum input at the maximum reference in the forward direction. Minimum and maximum references are defined by parameters *1104* REF1 MIN and *1105* REF1 MAX. **Note:** Parameter *1003* DIRECTION must be set to 3 (REQUEST). 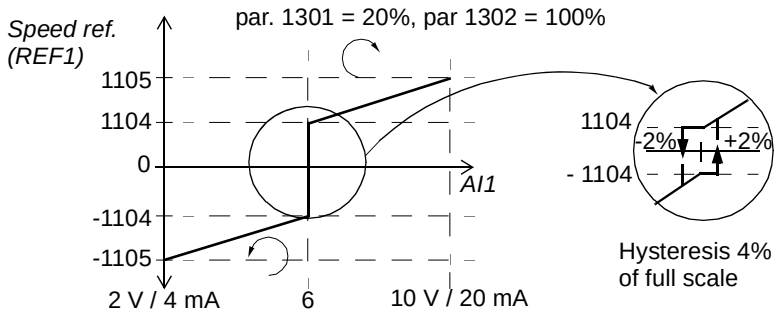 **WARNING!** If parameter *1301* MINIMUM AI1 is set to 0 V and analog input signal is lost (that is 0 V), the rotation of the motor is reversed to the maximum reference. Set the following parameters to activate a fault when analog input signal is lost: Set parameter *1301* MINIMUM AI1 to 20% (2 V or 4 mA). Set parameter *3021* AI1 FAULT LIMIT to 5% or higher. Set parameter *3001* AI<MIN FUNCTION to 1 (FAULT).	
	5 = DI3U,4D(R)	Digital input DI3: Reference increase. Digital input DI4: Reference decrease. Stop command resets the reference to zero. Parameter *2205* ACCELER TIME 2 defines the rate of the reference change.	
	6 = DI3U,4D	Digital input DI3: Reference increase. Digital input DI4: Reference decrease. The program stores the active speed reference (not reset by a stop command). When the drive is restarted, the motor ramps up with the selected acceleration rate to the stored reference. Parameter *2205* ACCELER TIME2 defines the rate of the reference change.	
	11 = DI3U,4D(RNC)	Digital input DI3: Reference increase. Digital input DI4: Reference decrease. Stop command resets the reference to zero. The reference is not saved if the control source is changed (from EXT1 to EXT2, from EXT2 to EXT1 or from LOC to REM). Parameter *2205* ACCELER TIME 2 defines the rate of the reference change.	
	12 = DI3U,4D(NC)	Digital input DI3: Reference increase. Digital input DI4: Reference decrease. The program stores the active speed reference (not reset by a stop command). The reference is not saved if the control source is changed (from EXT1 to EXT2, from EXT2 to EXT1 or from LOC to REM). When the drive is restarted, the motor ramps up with the selected acceleration rate to the stored reference. Parameter *2205* ACCELER TIME 2 defines the rate of the reference change.	
	14 = AI1+POT	Reference is calculated with the following equation: REF = AI1(%) + POT(%) - 50%	
	16 = AI1-POT	Reference is calculated with the following equation: REF = AI1(%) + 50% - POT(%)	
	30 = DI4U,5D	See selection DI3U,4D.	
	31 = DI4U,5D(NC)	See selection DI3U,4D(NC).	
	32 = FREQ INPUT	Frequency input	

Parameters in the Long parameter mode			
Index	**Name/Selection**	**Description**	**Def**
1104	REF1 MIN	Defines the minimum value for external reference REF1. Corresponds to the minimum setting of the used source signal.	0.0 Hz
	0.0…500.0 Hz	Minimum value. Example: Analog input AI1 is selected as the reference source (value of parameter *1103* REF1 SELECT is AI1). The reference minimum and maximum correspond to the *1301* MINIMUM AI1 and *1302* MAXIMUM AI1 settings as follows: 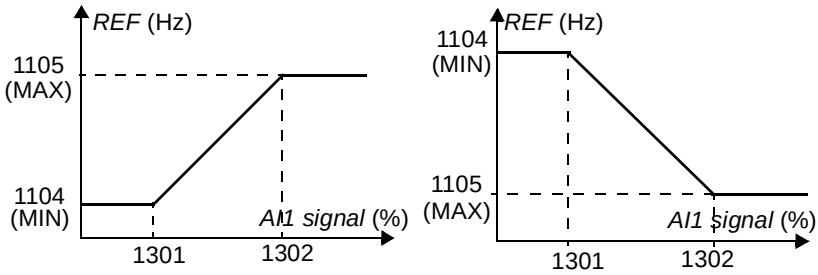 	
1105	REF1 MAX	Defines the maximum value for external reference REF1. Corresponds to the maximum setting of the used source signal.	E: 50.0 Hz / U: 60.0 Hz
	0.0…500.0 Hz	Maximum value. See the example for parameter *1104* REF1 MIN.	
1106	REF2 SELECT	Selects the signal source for external reference REF2.	2 = POT
	0 = KEYPAD	See parameter *1103* REF1 SELECT.	
	1 = AI1	See parameter *1103* REF1 SELECT.	
	2 = POT	See parameter *1103* REF1 SELECT.	
	3 = AI1/JOYST	See parameter *1103* REF1 SELECT.	
	5 = DI3U,4D(R)	See parameter *1103* REF1 SELECT.	
	6 = DI3U,4D	See parameter *1103* REF1 SELECT.	
	11 = DI3U,4D(RNC)	See parameter *1103* REF1 SELECT.	
	12 = DI3U,4D(NC)	See parameter *1103* REF1 SELECT.	
	14 = AI1+POT	See parameter *1103* REF1 SELECT.	
	16 = AI1-POT	See parameter *1103* REF1 SELECT.	
	19 = PID1OUT	PID controller 1 output. See parameter group *40 PROCESS PID SET 1*.	
	30 = DI4U,5D	See parameter *1103* REF1 SELECT.	
	31 = DI4U,5D(NC)	See parameter *1103* REF1 SELECT.	
	32 = FREQ INPUT	See parameter *1103* REF1 SELECT.	
1107	REF2 MIN	Defines the minimum value for external reference REF2. Corresponds to the minimum setting of the used source signal.	0.0%
	0.0…100.0%	Value in percent of the maximum frequency. See the example for parameter *1104* REF1 MIN for correspondence to the source signal limits.	
1108	REF2 MAX	Defines the maximum value for external reference REF2. Corresponds to the maximum setting of the used source signal.	100.0%
	0.0…100.0%	Value in percent of the maximum frequency. See the example for parameter *1104* REF1 MIN for correspondence to the source signal limits.	
1109	LOC REF SOURCE	Selects the source for the local reference.	0 = POT
	0 = POT	Potentiometer	
	1 = KEYPAD	Control panel	

Parameters in the Long parameter mode			
Index	**Name/Selection**	**Description**	**Def**
12 CONSTANT SPEEDS		Constant speed selection and values. It is possible to define seven positive constant speeds. Constant speeds are selected with digital inputs. Constant speed activation overrides the external speed reference. Constant speed selections are ignored if drive is in the local control mode.	
1201	CONST SPEED SEL	Selects the constant speed activation signal.	9 = DI3,4
	0 = NOT SEL	No constant speed in use	
	1 = DI1	Speed defined by parameter *1202* CONST SPEED 1 is activated through digital input DI1. 1 = active, 0 = inactive.	
	2 = DI2	Speed defined by parameter *1202* CONST SPEED 1 is activated through digital input DI2. 1 = active, 0 = inactive.	
	3 = DI3	Speed defined by parameter *1202* CONST SPEED 1 is activated through digital input DI3. 1 = active, 0 = inactive.	
	4 = DI4	Speed defined by parameter *1202* CONST SPEED 1 is activated through digital input DI4. 1 = active, 0 = inactive.	
	5 = DI5	Speed defined by parameter *1202* CONST SPEED 1 is activated through digital input DI5. 1 = active, 0 = inactive.	
	7 = DI1,2	Constant speed selection through digital inputs DI1 and DI2.1 = DI active, 0 = DI inactive. **DI1 / DI2 / Operation** 0 / 0 / No constant speed 1 / 0 / Speed defined by parameter *1202* CONST SPEED 1 0 / 1 / Speed defined by parameter *1203* CONST SPEED 2 1 / 1 / Speed defined by parameter *1204* CONST SPEED 3	
	8 = DI2,3	See selection DI1,2.	
	9 = DI3,4	See selection DI1,2.	
	10 = DI4,5	See selection DI1,2.	
	12 = DI1,2,3	Constant speed selection through digital inputs DI1, DI2 and DI3. 1 = DI active, 0 = DI inactive. **DI1 / DI2 / DI3 / Operation** 0 / 0 / 0 / No constant speed 1 / 0 / 0 / Speed defined by parameter *1202* CONST SPEED 1 0 / 1 / 0 / Speed defined by parameter *1203* CONST SPEED 2 1 / 1 / 0 / Speed defined by parameter *1204* CONST SPEED 3 0 / 0 / 1 / Speed defined by parameter *1205* CONST SPEED 4 1 / 0 / 1 / Speed defined by parameter *1206* CONST SPEED 5 0 / 1 / 1 / Speed defined by parameter *1207* CONST SPEED 6 1 / 1 / 1 / Speed defined by parameter *1208* CONST SPEED 7	
	13 = DI3,4,5	See selection DI1,2,3.	
	-1 = DI1(INV)	Speed defined by parameter *1202* CONST SPEED 1 is activated through inverted digital input DI1. 0 = active, 1 = inactive.	
	-2 = DI2(INV)	Speed defined by parameter *1202* CONST SPEED 1 is activated through inverted digital input DI2. 0 = active, 1 = inactive.	
	-3 = DI3(INV)	Speed defined by parameter *1202* CONST SPEED 1 is activated through inverted digital input DI3. 0 = active, 1 = inactive.	
	-4 = DI4(INV)	Speed defined by parameter *1202* CONST SPEED 1 is activated through inverted digital input DI4. 0 = active, 1 = inactive.	

Parameters in the Long parameter mode			
Index	**Name/Selection**	**Description**	**Def**
	-5 = DI5(INV)	Speed defined by parameter *1202* CONST SPEED 1 is activated through inverted digital input DI5. 0 = active, 1 = inactive.	
	-7 = DI1,2 (INV)	Constant speed selection through inverted digital inputs DI1 and DI2. 1 = DI active, 0 = DI inactive. **DI1 / DI2 / Operation** 1 / 1 / No constant speed 0 / 1 / Speed defined by parameter *1202* CONST SPEED 1 1 / 0 / Speed defined by parameter *1203* CONST SPEED 2 0 / 0 / Speed defined by parameter *1204* CONST SPEED 3	
	-8 = DI2,3 (INV)	See selection DI1,2 (INV).	
	-9 = DI3,4 (INV)	See selection DI1,2 (INV).	
	-10 = DI4,5 (INV)	See selection DI1,2 (INV).	
	-12 = DI1,2,3 (INV)	Constant speed selection through inverted digital inputs DI1, DI2 and DI3. 1 = DI active, 0 = DI inactive. **DI1 / DI2 / DI3 / Operation** 1 / 1 / 1 / No constant speed 0 / 1 / 1 / Speed defined by parameter *1202* CONST SPEED 1 1 / 0 / 1 / Speed defined by parameter *1203* CONST SPEED 2 0 / 0 / 1 / Speed defined by parameter *1204* CONST SPEED 3 1 / 1 / 0 / Speed defined by parameter *1205* CONST SPEED 4 0 / 1 / 0 / Speed defined by parameter *1206* CONST SPEED 5 1 / 0 / 0 / Speed defined by parameter *1207* CONST SPEED 6 0 / 0 / 0 / Speed defined by parameter *1208* CONST SPEED 7	
	-13 = DI3,4,5 (INV)	See selection DI1,2,3(INV).	
1202	CONST SPEED 1	Defines constant speed 1 (that is drive output frequency).	E: 5.0 Hz / U: 6.0 Hz
	0.0…500.0 Hz	Output frequency	
1203	CONST SPEED 2	Defines constant speed 2 (that is drive output frequency).	E: 10.0 Hz / U: 12.0 Hz
	0.0…500.0 Hz	Output frequency	
1204	CONST SPEED 3	Defines constant speed 3 (that is drive output frequency).	E: 15.0 Hz / U: 18.0 Hz
	0.0…500.0 Hz	Output frequency	
1205	CONST SPEED 4	Defines constant speed 4 (that is drive output frequency).	E: 20.0 Hz / U: 24.0 Hz
	0.0…500.0 Hz	Output frequency	
1206	CONST SPEED 5	Defines constant speed 5 (that is drive output frequency).	E: 25.0 Hz / U: 30.0 Hz
	0.0…500.0 Hz	Output frequency	
1207	CONST SPEED 6	Defines constant speed 6 (that is drive output frequency).	E: 40.0 Hz / U: 48.0 Hz
	0.0…500.0 Hz	Output frequency	
1208	CONST SPEED 7	Defines constant speed 7 (that is drive output frequency). Note that constant speed 7 may be used also as jogging speed (*1010* JOGGING SEL) and with fault function *3001* AI<MIN FUNCTION.	E: 50.0 Hz / U: 60.0 Hz
	0.0…500.0 Hz	Output frequency	

Parameters in the Long parameter mode			
Index	**Name/Selection**	**Description**	**Def**
13 ANALOG INPUTS		Analog input signal processing	
1301	MINIMUM AI1	Defines the minimum %-value that corresponds to minimum mA/(V) signal for analog input AI1. When used as a reference, the value corresponds to the reference minimum setting. 0...20 mA ≙ 0...100% 4...20 mA ≙ 20...100% Example: If AI1 is selected as the source for external reference REF1, this value corresponds to the value of parameter *1104* REF1 MIN. **Note:** MINIMUM AI value must not exceed MAXIMUM AI value.	0.0%
	0.0…100.0%	Value in percent of the full signal range. Example: If the minimum value for analog input is 4 mA, the percent value for 0…20 mA range is: (4 mA / 20 mA) · 100% = 20%	
1302	MAXIMUM AI1	Defines the maximum %-value that corresponds to maximum mA/(V) signal for analog input AI1. When used as a reference, the value corresponds to the reference maximum setting. 0...20 mA ≙ 0...100% 4...20 mA ≙ 20...100% Example: If AI1 is selected as the source for external reference REF1, this value corresponds to the value of parameter *1105* REF1 MAX.	100.0%
	0.0…100.0%	Value in percent of the full signal range. Example: If the maximum value for analog input is 10 mA, the percent value for 0…20 mA range is: (10 mA / 20 mA) · 100% = 50%	
1303	FILTER AI1	Defines the filter time constant for analog input AI1, that is the time within which 63% of a step change is reached. 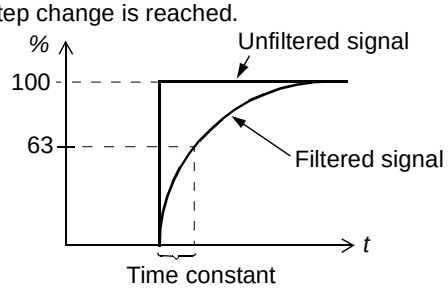 	0.1 s
	0.0…10.0 s	Filter time constant	
14 RELAY OUTPUTS		Status information indicated through relay output and relay operating delays	
1401	RELAY OUTPUT 1	Selects a drive status indicated through relay output RO. The relay energizes when the status meets the setting.	3 = FAULT(-1)
	0 = NOT SEL	Not used	
	1 = READY	Ready to function: Run enable signal on, no fault, supply voltage within acceptable range and emergency stop signal off.	
	2 = RUN	Running: Start signal on, Run enable signal on, no active fault.	
	3 = FAULT(-1)	Inverted fault. Relay is de-energized on a fault trip.	
	4 = FAULT	Fault	
	5 = ALARM	Alarm	
	6 = REVERSED	Motor rotates in reverse direction.	

Parameters in the Long parameter mode			
Index	**Name/Selection**	**Description**	**Def**
	7 = STARTED	The drive has received a start command. Relay is energized even if Run enable signal is off. Relay is de-energized when drive receives a stop command or a fault occurs.	
	8 = SUPRV 1 OVER	Status according to supervision parameters *3201* SUPERV 1 PARAM, *3202* SUPERV 1 LIM LO and *3203* SUPERV 1 LIM HI.	
	9 = SUPRV 1 UNDER	See selection SUPRV 1 OVER.	
	10 = SUPRV 2 OVER	Status according to supervision parameters *3204* SUPERV 2 PARAM, *3205* SUPERV 2 LIM LO and *3206* SUPERV 2 LIM HI.	
	11 = SUPRV 2 UNDER	See selection SUPRV 2 OVER.	
	12 = SUPRV 3 OVER	Status according to supervision parameters *3207* SUPERV 3 PARAM, *3208* SUPERV 3 LIM LO and *3209* SUPERV 3 LIM HI.	
	13 = SUPRV 3 UNDER	See selection SUPRV 3 OVER.	
	14 = AT SET POINT	Output frequency is equal to the reference frequency.	
	15 = FAULT(RST)	Fault. Automatic reset after the autoreset delay. See parameter group *31 AUTOMATIC RESET*.	
	16 = FLT/ALARM	Fault or alarm	
	17 = EXT CTRL	Drive is under external control.	
	18 = REF 2 SEL	External reference REF2 is in use.	
	19 = CONST FREQ	A constant speed is in use. See parameter group *12 CONSTANT SPEEDS*.	
	20 = REF LOSS	Reference or active control location is lost.	
	21 = OVERCURRENT	Alarm/Fault by overcurrent protection function	
	22 = OVERVOLTAGE	Alarm/Fault by overvoltage protection function	
	23 = DRIVE TEMP	Alarm/Fault by drive overtemperature protection function	
	24 =UNDERVOLTAGE	Alarm/Fault by undervoltage protection function	
	25 = AI1 LOSS	Analog input AI1 signal is lost.	
	27 = MOTOR TEMP	Alarm/Fault by motor overtemperature protection function. See parameter *3005* MOT THERM PROT.	
	28 = STALL	Alarm/Fault by stall protection function. See parameter *3010* STALL FUNCTION.	
	29 = UNDERLOAD	Alarm/Fault by underload protection function. See parameter *3013* UNDERLOAD FUNC.	
	30 = PID SLEEP	PID sleep function. See parameter group *40 PROCESS PID SET 1*.	
	33 = FLUX READY	Motor is magnetized and able to supply nominal torque.	
1404	RO 1 ON DELAY	Defines the operation delay for relay output RO.	0.0 s
	0.0…3600.0 s	Delay time. The figure below illustrates the operation (on) and release (off) delays for relay output RO. 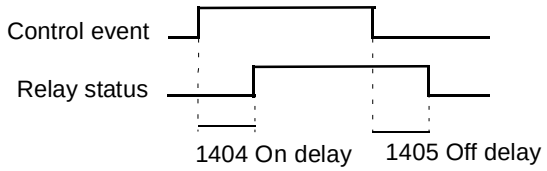	
1405	RO 1 OFF DELAY	Defines the release delay for relay output RO.	0.0 s
	0.0…3600.0 s	Delay time. See the figure for parameter *1404* RO 1 ON DELAY.	

Parameters in the Long parameter mode			
Index	**Name/Selection**	**Description**	**Def**
16 SYSTEM CONTROLS		Run enable, parameter lock etc.	
1601	RUN ENABLE	Selects a source for the external Run enable signal.	0 = NOT SEL
	0 = NOT SEL	Allows the drive to start without an external Run enable signal.	
	1 = DI1	External signal required through digital input DI1. 1 = Run enable. If Run enable signal is switched off, the drive does not start or coasts to stop if it is running.	
	2 = DI2	See selection DI1.	
	3 = DI3	See selection DI1.	
	4 = DI4	See selection DI1.	
	5 = DI5	See selection DI1.	
	-1 = DI1(INV)	External signal required through inverted digital input DI1. 0 = Run enable. If Run enable signal is switched on, the drive does not start or coasts to stop if it is running.	
	-2 = DI2(INV)	See selection DI1(INV)	
	-3 = DI3(INV)	See selection DI1(INV)	
	-4 = DI4(INV)	See selection DI1(INV)	
	-5 = DI5(INV)	See selection DI1(INV)	
1602	PARAMETER LOCK	Selects the state of the parameter lock. The lock prevents parameter changing from the control panel.	1 = OPEN
	0 = LOCKED	Parameter values cannot be changed from the control panel. The lock can be opened by entering the valid code to parameter *1603* PASS CODE. The lock does not prevent parameter changes made by macros.	
	1 = OPEN	The lock is open. Parameter values can be changed.	
	2 = NOT SAVED	Parameter changes from the control panel are not stored into the permanent memory. To store changed parameter values, set parameter *1607* PARAM SAVE value to 1 (SAVE).	
1603	PASS CODE	Selects the pass code for the parameter lock (see parameter *1602* PARAMETER LOCK).	0
	0…65535	Pass code. Setting 358 opens the lock. The value reverts back to 0 automatically.	
1604	FAULT RESET SEL	Selects the source for the fault reset signal. The signal resets the drive after a fault trip if the cause of the fault no longer exists.	0 = KEYPAD
	0 = KEYPAD	Fault reset only from the control panel	
	1 = DI1	Reset through digital input DI1 (reset on the rising edge of DI1) or from the control panel	
	2 = DI2	See selection DI1.	
	3 = DI3	See selection DI1.	
	4 = DI4	See selection DI1.	
	5 = DI5	See selection DI1.	
	7 = START/STOP	Reset along with the stop signal received through a digital input, or from the control panel.	
	-1 = DI1(INV)	Reset through inverted digital input DI1 (reset on the falling edge of DI1) or from the control panel	
	-2 = DI2(INV)	See selection DI1(INV).	

Parameters in the Long parameter mode			
Index	**Name/Selection**	**Description**	**Def**
	-3 = DI3(INV)	See selection DI1(INV).	
	-4 = DI4(INV)	See selection DI1(INV).	
	-5 = DI5(INV)	See selection DI1(INV).	
1606	LOCAL LOCK	Disables entering the local control mode or selects the source for the local control mode lock signal. When local lock is active, entering the local control mode is disabled (LOC/REM key of the panel).	0 = NOT SEL
	0 = NOT SEL	Local control is allowed.	
	1 = DI1	Local control mode lock signal through digital input DI1. Rising edge of digital input DI1: Local control disabled. Falling edge of digital input DI1: Local control allowed.	
	2 = DI2	See selection DI1.	
	3 = DI3	See selection DI1.	
	4 = DI4	See selection DI1.	
	5 = DI5	See selection DI1.	
	7 = ON	Local control is disabled.	
	-1 = DI1(INV)	Local lock through inverted digital input DI1. Rising edge of inverted digital input DI1: Local control allowed. Falling edge of inverted digital input DI1: Local control disabled.	
	-2 = DI2(INV)	See selection DI1(INV).	
	-3 = DI3(INV)	See selection DI1(INV).	
	-4 = DI4(INV)	See selection DI1(INV).	
	-5 = DI5(INV)	See selection DI1(INV).	
1607	PARAM SAVE	Saves the valid parameter values into the permanent memory.	0 = DONE
	0 = DONE	Saving completed	
	1 = SAVE	Saving in progress	
1610	DISPLAY ALARMS	Activates/deactivates alarms *OVERCURRENT* (code: *A2001*), *OVERVOLTAGE* (code: *A2002*), *UNDERVOLTAGE* (code: *A2003*) and *DEVICE OVERTEMP* (code: *A2006*). For more information, see chapter *Fault tracing* on page *127*.	0 = NO
	0 = NO	Alarms are inactive.	
	1 = YES	Alarms are active.	
1611	PARAMETER VIEW	Selects the parameter view, that is which parameters are shown on the control panel. **Note:** This parameter is visible only when it is activated by the optional FlashDrop device. FlashDrop allows easy customisation of the parameter list, for example, selected parameters can be hidden. For more information, see *MFDT-01 FlashDrop user's manual* (3AFE68591074 [English]). FlashDrop parameter values are activated by setting parameter *9902* APPLIC MACRO to 31 (LOAD FD SET).	0 = DEFAULT
	0 = DEFAULT	Complete long and short parameter lists	
	1 = FLASHDROP	FlashDrop parameter list. Does not include short parameter list. Parameters which are hidden by the FlashDrop device are not visible.	

Parameters in the Long parameter mode			
Index	**Name/Selection**	**Description**	**Def**
18 FREQ INPUT		Frequency input signal processing. Digital input DI5 can be programmed as a frequency input. Frequency input can be used as external reference signal source. See parameter *1103*/*1106* REF1/2 SELECT.	
1801	FREQ INPUT MIN	Defines the minimum input value when DI5 is used as a frequency input.	0 Hz
	0…16000 Hz	Minimum frequency	
1802	FREQ INPUT MAX	Defines the maximum input value when DI5 is used as a frequency input.	1000 Hz
	0…16000 Hz	Maximum frequency	
1803	FILTER FREQ IN	Defines the filter time constant for frequency input, that is the time within which 63% of a step change is reached.	0.1 s
	0.0…10.0 s	Filter time constant	
20 LIMITS		Drive operation limits	
2003	MAX CURRENT	Defines the allowed maximum motor current.	$1.8 \cdot I_{2N}$ A
	$0.0…1.8 \cdot I_{2N}$ A	Current	
2005	OVERVOLT CTRL	Activates or deactivates the overvoltage control of the intermediate DC link. Fast braking of a high inertia load causes the voltage to rise to the overvoltage control limit. To prevent the DC voltage from exceeding the limit, the overvoltage controller automatically decreases the braking torque. **Note:** If a brake chopper and resistor are connected to the drive, the controller must be off (selection DISABLE) to allow chopper operation.	1 = ENABLE
	0 = DISABLE	Overvoltage control deactivated	
	1 = ENABLE	Overvoltage control activated	
2006	UNDERVOLT CTRL	Activates or deactivates the undervoltage control of the intermediate DC link. If the DC voltage drops due to input power cut off, the undervoltage controller automatically decreases the motor speed in order to keep the voltage above the lower limit. By decreasing the motor speed, the inertia of the load causes regeneration back into the drive, keeping the DC link charged and preventing an undervoltage trip until the motor coasts to stop. This acts as a power-loss ride-through functionality in systems with a high inertia, such as a centrifuge or a fan.	1 = ENABLE (TIME)
	0 = DISABLE	Undervoltage control deactivated	
	1 = ENABLE(TIME)	Undervoltage control activated. The undervoltage control is active for 500 ms.	
	2 = ENABLE	Undervoltage control activated. No operation time limit.	
2007	MINIMUM FREQ	Defines the minimum limit for the drive output frequency. A positive (or zero) minimum frequency value defines two ranges, one positive and one negative. A negative minimum frequency value defines one speed range. **Note:** MINIMUM FREQ value must not exceed MAXIMUM FREQ value. 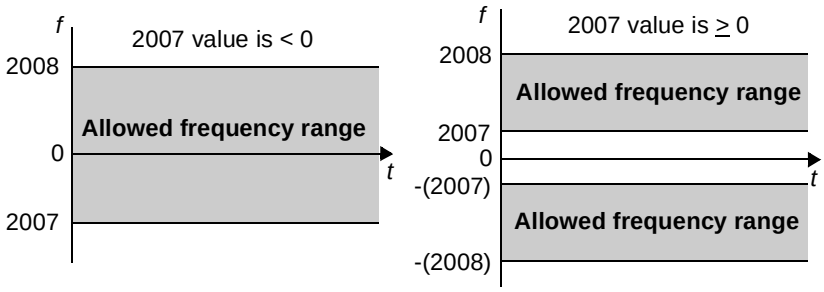	0.0 Hz
	-500.0…500.0 Hz	Minimum frequency	

Parameters in the Long parameter mode			
Index	**Name/Selection**	**Description**	**Def**
2008	MAXIMUM FREQ	Defines the maximum limit for the drive output frequency.	E: 50.0 Hz / U: 60.0 Hz
	0.0…500.0 Hz	Maximum frequency. See parameter *2007* MINIMUM FREQ.	
2020	BRAKE CHOPPER	Selects the brake chopper control.	0 = INBUILT
	0 = INBUILT	Internal brake chopper control. **Note:** Ensure the brake resistor(s) is installed and the overvoltage control is switched off by setting parameter *2005* OVERVOLT CTRL to selection 0 (DISABLE).	
	1 = EXTERNAL	External brake chopper control. **Note:** The drive is compatible only with ABB **ACS-BRK-X** brake units. **Note:** Ensure the brake unit is installed and the overvoltage control is switched off by setting parameter *2005* OVERVOLT CTRL to selection 0 (DISABLE).	
21 START/STOP		Start and stop modes of the motor	
2101	START FUNCTION	Selects the motor starting method.	1 = AUTO
	1 = AUTO	Frequency reference ramps immediately from 0 Hz.	
	2 = DC MAGN	The drive pre-magnetizes the motor with DC current before the start. The pre-magnetizing time is defined by parameter *2103* DC MAGN TIME. **Note:** Starting the drive connected to a rotating motor is not possible when 2 (DC MAGN) is selected. **WARNING!** The drive starts after the set pre-magnetizing time has passed even if the motor magnetization is not completed. In applications where a full break-away torque is essential, always ensure that the constant magnetizing time is long enough to allow generation of full magnetization and torque.	
	4 = TORQ BOOST	Torque boost should be selected if a high break-away torque is required. The drive pre-magnetizes the motor with DC current before the start. The pre-magnetizing time is defined by parameter *2103* DC MAGN TIME. Torque boost is applied at start. Torque boost is stopped when output frequency exceeds 20 Hz or when it is equal to the reference value. See parameter *2110* TORQ BOOST CURR. **Note:** Starting the drive connected to a rotating motor is not possible when 4 (TORQ BOOST) is selected. **WARNING!** The drive starts after the set pre-magnetizing time has passed although the motor magnetization is not completed. In applications where a full break-away torque is essential, always ensure that the constant magnetizing time is long enough to allow generation of full magnetization and torque.	
	6 = SCAN START	Frequency scanning flying start (starting the drive connected to a rotating motor). Based on frequency scanning (interval *2008* MAXIMUM FREQ...*2007* MINIMUM FREQ) to identify the frequency. If frequency identification fails, DC magnetization is used. See selection 2 (DC MAGN).	
	7 = SCAN+BOOST	Combines frequency scanning flying start (starting the drive connected to a rotating motor) and torque boost. See selections 6 (SCAN START) and 4 (TORQ BOOST). If frequency identification fails, torque boost is used.	
2102	STOP FUNCTION	Selects the motor stop function.	1 = COAST
	1 = COAST	Stop by cutting off the motor power supply. The motor coasts to stop.	
	2 = RAMP	Stop along a ramp. See parameter group *22 ACCEL/DECEL*.	

Parameters in the Long parameter mode			
Index	**Name/Selection**	**Description**	**Def**
2103	DC MAGN TIME	Defines the pre-magnetizing time. See parameter *2101* START FUNCTION. After the start command, the drive automatically pre-magnetizes the motor for the defined time.	0.30 s
	0.00…10.00 s	Magnetizing time. Set this value long enough to allow full motor magnetization. Too long a time heats the motor excessively.	
2104	DC HOLD CTL	Activates the DC braking function.	0 = NOT SEL
	0 = NOT SEL	Inactive	
	2 = DC BRAKING	DC current braking function active. If parameter *2102* STOP FUNCTION is set to 1(COAST), DC braking is applied after the start command is removed. If parameter *2102* STOP FUNCTION is set to 2 (RAMP), DC braking is applied after the ramp.	
2106	DC CURR REF	Defines the DC braking current. See parameter *2104* DC HOLD CTL.	30%
	0…100%	Value in percent of the motor nominal current (parameter *9906* MOTOR NOM CURR)	
2107	DC BRAKE TIME	Defines the DC braking time.	0.0 s
	0.0…250.0 s	Time	
2108	START INHIBIT	Sets the Start inhibit function on or off. If the drive is not actively started and running, the Start inhibit function ignores a pending start command in any of the following situations and a new start command is required: - a fault is reset. - Run enable signal activates while the start command is active. See parameter *1601* RUN ENABLE. - the control mode changes from local to remote. - the external control mode switches from EXT1 to EXT2 or from EXT2 to EXT1.	0 = OFF
	0 = OFF	Disabled	
	1 = ON	Enabled	
2109	EMERG STOP SEL	Selects the source for the external emergency stop command. The drive cannot be restarted before the emergency stop command is reset. **Note:** The installation must include emergency stop devices and any other safety equipment that may be needed. Pressing the stop key on the drive's control panel does NOT - generate an emergency stop of the motor. - separate the drive from dangerous potential.	0 = NOT SEL
	0 = NOT SEL	Emergency stop function is not selected.	
	1 = DI1	Digital input DI1. 1 = stop along the emergency stop ramp. See parameter *2208* EMERG DEC TIME. 0 = emergency stop command reset.	
	2 = DI2	See selection DI1.	
	3 = DI3	See selection DI1.	
	4 = DI4	See selection DI1.	
	5 = DI5	See selection DI1.	
	-1 = DI1(INV)	Inverted digital input DI. 0 = stop along the emergency stop ramp. See parameter *2208* EMERG DEC TIME. 1 = emergency stop command reset	
	-2 = DI2(INV)	See selection DI1(INV).	
	-3 = DI3(INV)	See selection DI1(INV).	

Parameters in the Long parameter mode			
Index	**Name/Selection**	**Description**	**Def**
	-4 = DI4(INV)	See selection DI1(INV).	
	-5 = DI5(INV)	See selection DI1(INV).	
2110	TORQ BOOST CURR	Defines the maximum supplied current during torque boost. See parameter *2101* START FUNCTION.	100%
	15…300%	Value in percent	
2112	ZERO SPEED DELAY	Defines the delay for the Zero speed delay function. The function is useful in applications where a smooth and quick restarting is essential. During the delay the drive knows accurately the rotor position. **No Zero speed delay** **With Zero speed delay** 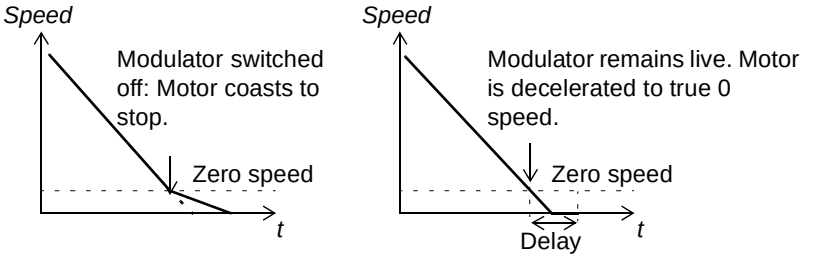 Zero speed delay can be used, for example, with jogging function (parameter *1010* JOGGING SEL). **No Zero speed delay** The drive receives a stop command and decelerates along a ramp. When the motor actual speed falls below an internal limit (called Zero speed), the modulator is switched off. The inverter modulation is stopped and the motor coasts to standstill. **With Zero speed delay** The drive receives a stop command and decelerates along a ramp. When the actual motor speed falls below an internal limit (called Zero speed), the zero speed delay function activates. During the delay the functions keeps the modulator live: The inverter modulates, motor is magnetized and the drive is ready for a quick restart.	0.0 = NOT SEL
	0.0 = NOT SEL 0.0…60.0 s	Delay time. If parameter value is set to zero, the Zero speed delay function is disabled.	
22 ACCEL/DECEL		Acceleration and deceleration times	
2201	ACC/DEC 1/2 SEL	Defines the source from which the drive reads the signal that selects between two ramp pairs, acceleration/deceleration pair 1 and 2. Ramp pair 1 is defined by parameters *2202* ACCELER TIME 1, *2003* DECELER TIME 1 and *2204* RAMP SHAPE 1. Ramp pair 2 is defined by parameters *2205* ACCELER TIME 2, *2206* DECELER TIME 2 and *2207* RAMP SHAPE 1.	5 = DI5
	0 = NOT SEL	Ramp pair 1 is used.	
	1 = DI1	Digital input DI1. 1 = ramp pair 2, 0 = ramp pair 1.	
	2 = DI2	See selection DI1.	
	3 = DI3	See selection DI1.	
	4 = DI4	See selection DI1.	
	5 = DI5	See selection DI1.	
	-1 = DI1(INV)	Inverted digital input DI1. 0 = ramp pair 2, 1 = ramp pair 1.	
	-2 = DI2(INV)	See selection DI1(INV).	

Parameters in the Long parameter mode			
Index	**Name/Selection**	**Description**	**Def**
	-3 = DI3(INV)	See selection DI1(INV).	
	-4 = DI4(INV)	See selection DI1(INV).	
	-5 = DI5(INV)	See selection DI1(INV).	
2202	ACCELER TIME 1	Defines the acceleration time 1, that is the time required for the speed to change from zero to the speed defined by parameter *2008* MAXIMUM FREQ. - If the speed reference increases faster than the set acceleration rate, the motor speed follows the acceleration rate. - If the speed reference increases slower than the set acceleration rate, the motor speed follows the reference signal. - If the acceleration time is set too short, the drive automatically prolongs the acceleration in order not to exceed the drive operating limits. Actual acceleration time depends on parameter *2204* RAMP SHAPE 1 setting.	5.0 s
	0.0…1800.0 s	Time	
2203	DECELER TIME 1	Defines the deceleration time 1, that is the time required for the speed to change from the value defined by parameter *2008* MAXIMUM FREQ to zero. - If the speed reference decreases slower than the set deceleration rate, the motor speed follows the reference signal. - If the reference changes faster than the set deceleration rate, the motor speed follows the deceleration rate. - If the deceleration time is set too short, the drive automatically prolongs the deceleration in order not to exceed drive operating limits. If a short deceleration time is needed for a high inertia application, the drive should be equipped with a brake resistor. Actual deceleration time depends on parameter *2204* RAMP SHAPE 1 setting.	5.0 s
	0.0…1800.0 s	Time	
2204	RAMP SHAPE 1	Selects the shape of the acceleration/deceleration ramp 1. The function is deactivated during emergency stop (*2109* EMERG STOP SEL) and jogging (*1010* JOGGING SEL).	0.0 = LINEAR
	0.0 = LINEAR 0.0…1000.0 s	0.0 s: Linear ramp. Suitable for steady acceleration or deceleration and for slow ramps. 0.1…1000.0 s: S-curve ramp. S-curve ramps are ideal for conveyors carrying fragile loads, or other applications where a smooth transition is required when changing from one speed to another. The S-curve consists of symmetrical curves at both ends of the ramp and a linear part in between. A rule of thumb A suitable relation between the ramp shape time and the acceleration ramp time is 1/5. 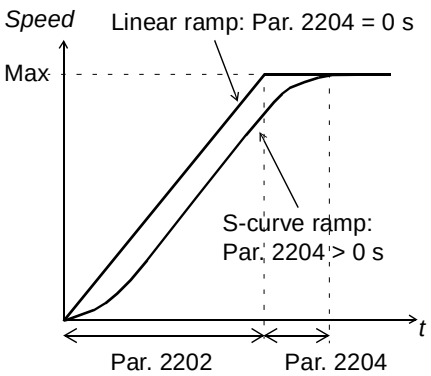 	

Parameters in the Long parameter mode			
Index	**Name/Selection**	**Description**	**Def**
2205	ACCELER TIME 2	Defines the acceleration time 2, that is the time required for the speed to change from zero to the speed defined by parameter *2008* MAXIMUM FREQ. See parameter *2202* ACCELER TIME 1. Acceleration time 2 is used also as jogging acceleration time. See parameter *1010* JOGGING SEL.	60.0 s
	0.0…1800.0 s	Time	
2206	DECELER TIME 2	Defines the deceleration time 2, that is the time required for the speed to change from the value defined by parameter *2008* MAXIMUM FREQ to zero. See parameter *2203* DECELER TIME 1. Deceleration time 2 is used also as jogging deceleration time. See parameter *1010* JOGGING SEL.	60.0 s
	0.0…1800.0 s	Time	
2207	RAMP SHAPE 2	Selects the shape of the acceleration/deceleration ramp 2. The function is deactivated during emergency stop (*2109* EMERG STOP SEL). Ramp shape 2 is used also as jogging ramp shape time. See parameter *1010* JOGGING SEL.	0.0 = LINEAR
	0.0 = LINEAR 0.0…1000.0 s	See parameter *2204* RAMP SHAPE 1.	
2208	EMERG DEC TIME	Defines the time within which the drive is stopped if an emergency stop is activated. See parameter *2109* EMERG STOP SEL.	1.0 s
	0.0…1800.0 s	Time	
2209	RAMP INPUT 0	Defines the source for forcing the ramp input to zero.	0 = NOT SEL
	0 = NOT SEL	Not selected	
	1 = DI1	Digital input DI1. 1 = ramp input is forced to zero. Ramp output ramps to zero according to the used ramp time.	
	2 = DI2	See selection DI1.	
	3 = DI3	See selection DI1.	
	4 = DI4	See selection DI1.	
	5 = DI5	See selection DI1.	
	-1 = DI1(INV)	Inverted digital input DI1. 0 = ramp input is forced to zero. Ramp output ramps to zero according to the used ramp time.	
	-2 = DI2(INV)	See selection DI1(INV).	
	-3 = DI3(INV)	See selection DI1(INV).	
	-4 = DI4(INV)	See selection DI1(INV).	
	-5 = DI5(INV)	See selection DI1(INV).	

Parameters in the Long parameter mode			
Index	**Name/Selection**	**Description**	**Def**
25 CRITICAL SPEEDS		Speed bands within which the drive is not allowed to operate. A Critical Speeds function is available for applications where it is necessary to avoid certain motor speeds or speed bands because of for example, mechanical resonance problems. The user can define three critical speeds or speed bands.	
2501	CRIT SPEED SEL	Activates/deactivates the critical speeds function. The critical speed function avoids specific speed ranges. Example: A fan has vibrations in the range of 18 to 23 Hz and 46 to 52 Hz. To make the drive to jump over the vibration speed ranges: - Activate the critical speeds function. - Set the critical speed ranges as in the figure below. 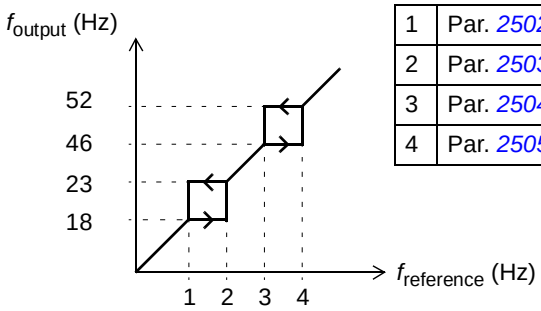 1 Par. *2502* = 18 Hz 2 Par. *2503* = 23 Hz 3 Par. *2504* = 46 Hz 4 Par. *2505* = 52 Hz	0 = OFF
	0 = OFF	Inactive	
	1 = ON	Active	
2502	CRIT SPEED 1 LO	Defines the minimum limit for critical speed/frequency range 1.	0.0 Hz
	0.0…500.0 Hz	Limit. The value cannot be above the maximum (parameter *2503* CRIT SPEED 1 HI).	
2503	CRIT SPEED 1 HI	Defines the maximum limit for critical speed/frequency range 1.	0.0 Hz
	0.0…500.0 Hz	Limit. The value cannot be below the minimum (parameter *2502* CRIT SPEED 1 LO).	
2504	CRIT SPEED 2 LO	See parameter *2502* CRIT SPEED 1 LO.	0.0 Hz
	0.0…500.0 Hz	See parameter *2502*.	
2505	CRIT SPEED 2 HI	See parameter *2503* CRIT SPEED 1 HI.	0.0 Hz
	0.0…500.0 Hz	See parameter *2503*.	
2506	CRIT SPEED 3 LO	See parameter *2502* CRIT SPEED 1 LO.	0.0 Hz
	0.0…500.0 Hz	See parameter *2502*.	
2507	CRIT SPEED 3 HI	See parameter *2503* CRIT SPEED 1 HI.	0.0 Hz
	0.0…500.0 Hz	See parameter *2503*.	

Parameters in the Long parameter mode			
Index	**Name/Selection**	**Description**	**Def**
26 MOTOR CONTROL		Motor control variables	
2601	FLUX OPT ENABLE	Activates/deactivates the Flux optimisation function. Flux optimisation reduces the total energy consumption and motor noise level when the drive operates below the nominal load. The total efficiency (motor and the drive) can be improved by 1% to 10%, depending on the load torque and speed. The disadvantage of this function is that the dynamic performance of the drive is weakened.	0 = OFF
	0 = OFF	Inactive	
	1 = ON	Active	
2603	IR COMP VOLT	Defines the output voltage boost at zero speed (IR compensation). The function is useful in applications with a high break-away torque. To prevent overheating, set IR compensation voltage as low as possible. The figure below illustrates the IR compensation. 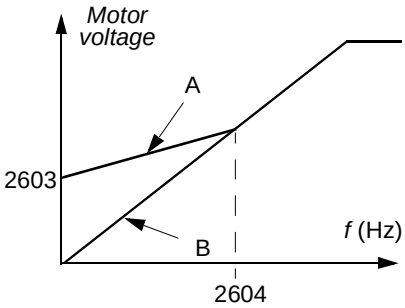 A = IR compensated B = No compensation Typical IR compensation values: P_N (kW) | 0.37 | 0.75 | 2.2 | 4.0 **200…240** V units IR comp (V) | 8.4 | 7.7 | 5.6 | 8.4 **380…480** V units IR comp (V) | 14 | 14 | 5.6 | 8.4	Type dependent
	0.0…100.0 V	Voltage boost	
2604	IR COMP FREQ	Defines the frequency at which the IR compensation is 0 V. See the figure for parameter *2603* IR COMP VOLT.	80%
	0...100%	Value in percent of the motor frequency	
2605	U/F RATIO	Selects the voltage to frequency (U/f) ratio below the field weakening point.	1 = LINEAR
	1 = LINEAR	Linear ratio for constant torque applications	
	2 = SQUARED	Squared ratio for centrifugal pump and fan applications. With squared U/f ratio the noise level is lower for most operating frequencies.	
2606	SWITCHING FREQ	Defines the switching frequency of the drive. Higher switching frequency results in lower acoustic noise. See also parameter *2607* SWITCH FREQ CTRL and section *Switching frequency derating, I2N* on page *139*. In multimotor systems, do not change the switching frequency from the default value.	4 kHz
	4 kHz	4 kHz	
	8 kHz	8 kHz	
	12 kHz	12 kHz	
	16 kHz	16 kHz	

Parameters in the Long parameter mode			
Index	**Name/Selection**	**Description**	**Def**
2607	SWITCH FREQ CTRL	Activates the switching frequency control. When active, the selection of parameter *2606* SWITCHING FREQ is limited when the drive internal temperature increases. See the figure below. This function allows the highest possible switching frequency at a specific operation point. Higher switching frequency results in lower acoustic noise, but higher internal losses. 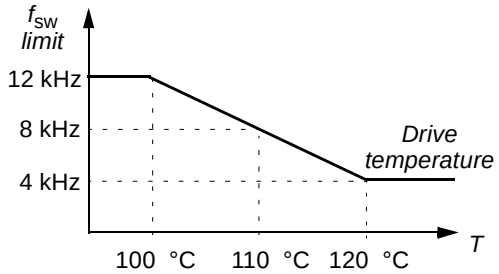	1 = ON
	1 = ON	Active	
	2 = ON (LOAD)	Switching frequency can adapt to loading instead of limiting the output current. This allows maximum loading with all switching frequency selections. The drive automatically decreases the actual switching frequency if loading is too high for the selected switching frequency.	
2608	SLIP COMP RATIO	Defines the slip gain for the motor slip compensation control. 100% means full slip compensation, 0% means no slip compensation. Other values can be used if a static speed error is detected despite of the full slip compensation. Example: 35 Hz constant speed reference is given to the drive. Despite of the full slip compensation (SLIP COMP RATIO = 100%), a manual tachometer measurement from the motor axis gives a speed value of 34 Hz. The static speed error is 35 Hz - 34 Hz = 1 Hz. To compensate the error, the slip gain should be increased.	0%
	0...200%	Slip gain	
2609	NOISE SMOOTHING	Enables the noise smoothing function. Noise smoothing distributes the acoustic motor noise over a range of frequencies instead of a single tonal frequency resulting in lower peak noise intensity. A random component with an average of 0 Hz is added to the switching frequency set by parameter *2606* SWITCHING FREQ. **Note:** Parameter has no effect if parameter *2606* SWITCHING FREQ is set to 16 kHz.	0 = DISABLE
	0 = DISABLE	Disabled	
	1 = ENABLE	Enabled	
2619	DC STABILIZER	Enables or disables the DC voltage stabilizer. The DC stabilizer is used to prevent possible voltage oscillations in the drive DC bus caused by motor load or weak supply network. In case of voltage variation, the drive tunes the frequency reference to stabilize the DC bus voltage and therefore the load torque oscillation.	0 = DISABLE
	0 = DISABLE	Disabled	
	1 = ENABLE	Enabled	

Parameters in the Long parameter mode			
Index	**Name/Selection**	**Description**	**Def**
30 FAULT FUNCTIONS		Programmable protection functions	
3001	AI<MIN FUNCTION	Defines the drive response if the analog input (AI) signal drops below the fault limits and AI is used • as the active reference source (group *11 REFERENCE SELECT*) • as the process or external PID controllers' feedback or setpoint source (group *40 PROCESS PID SET 1*) and the corresponding PID controller is active. *3021* AI1 FAULT LIMIT sets the fault limits	0 = NOT SEL
	0 = NOT SEL	Protection is inactive.	
	1 = FAULT	The drive trips on fault *AI1 LOSS* (code: *F0007*) and the motor coasts to stop. Fault limit is defined by parameter *3021* AI1 FAULT LIMIT.	
	2 = CONST SP 7	The drive generates alarm *AI1 LOSS* (code: *A2006*) and sets the speed to the value defined by parameter *1208* CONST SPEED 7. The alarm limit is defined by parameter *3021* AI1 FAULT LIMIT. **WARNING!** Make sure that it is safe to continue operation in case the analog input signal is lost.	
	3 = LAST SPEED	The drive generates alarm *AI1 LOSS* (code: *A2006*) and freezes the speed to the level the drive was operating at. The speed is determined by the average speed over the previous 10 seconds. The alarm limit is defined by parameter *3021* AI1 FAULT LIMIT. **WARNING!** Make sure that it is safe to continue operation in case the analog input signal is lost.	
3003	EXTERNAL FAULT 1	Selects an interface for an external fault 1 signal.	0 = NOT SEL
	0 = NOT SEL	Not selected	
	1 = DI1	External fault indication through digital input DI1. 1: Fault trip on *EXT FAULT 1* (code: *F0014*). Motor coasts to stop. 0: No external fault.	
	2 = DI2	See selection DI1.	
	3 = DI3	See selection DI1.	
	4 = DI4	See selection DI1.	
	5 = DI5	See selection DI1.	
	-1 = DI1(INV)	External fault indication through inverted digital input DI1. 0: Fault trip on *EXT FAULT 1* (code: *F0014*). Motor coasts to stop. 1: No external fault.	
	-2 = DI2(INV)	See selection DI1(INV).	
	-3 = DI3(INV)	See selection DI1(INV).	
	-4 = DI4(INV)	See selection DI1(INV).	
	-5 = DI5(INV)	See selection DI1(INV).	
3004	EXTERNAL FAULT 2	Selects an interface for an external fault 2 signal.	0 = NOT SEL
		See parameter *3003* EXTERNAL FAULT 1.	

Parameters in the Long parameter mode			
Index	**Name/Selection**	**Description**	**Def**
3005	MOT THERM PROT	Selects how the drive reacts when motor overtemperature is detected. The drive calculates the temperature of the motor on the basis of the following assumptions: 1) The motor is in the ambient temperature of 30 °C when power is applied to the drive. 2) Motor temperature is calculated using either the user-adjustable (see parameters *3006* MOT THERM TIME, *3007* MOT LOAD CURVE, *3008* ZERO SPEED LOAD and *3009* BREAK POINT FREQ) or automatically calculated motor thermal time constant and motor load curve. The load curve should be adjusted in case the ambient temperature exceeds 30 °C.	1 = FAULT
	0 = NOT SEL	Protection is inactive.	
	1 = FAULT	The drive trips on fault *MOT OVERTEMP* (code: *F0009*) when the temperature exceeds 110 °C, and the motor coasts to stop.	
	2 = ALARM	The drive generates alarm *MOTOR TEMP* (code: *A2010*) when the motor temperature exceeds 90 °C.	
3006	MOT THERM TIME	Defines the thermal time constant for the motor thermal model, that is the time within which the motor temperature has reached 63% of the nominal temperature with steady load. For thermal protection according to UL requirements for NEMA class motors, use the rule of thumb: Motor thermal time = 35 · t6. t6 (in seconds) is specified by the motor manufacturer as the time the motor can safely operate at six times its rated current. Thermal time for a Class 10 trip curve is 350 s, for a Class 20 trip curve 700 s, and for a Class 30 trip curve 1050 s. 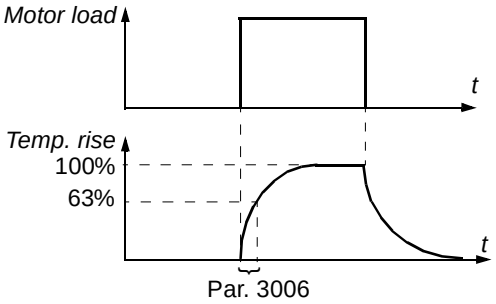 	500 s
	256…9999 s	Time constant	

Parameters in the Long parameter mode			
Index	**Name/Selection**	**Description**	**Def**
3007	MOT LOAD CURVE	Defines the load curve together with parameters *3008* ZERO SPEED LOAD and *3009* BREAK POINT FREQ. With the default value 100%, motor overload protection is functioning when the constant current exceeds 127% of the parameter *9906* MOTOR NOM CURR value. The default overloadability is at the same level as what motor manufacturers typically allow below 30 °C (86 °F) ambient temperature and below 1000 m (3300 ft) altitude. When the ambient temperature exceeds 30 °C (86 °F) or the installation altitude is over 1000 m (3300 ft), decrease the parameter 3007 value according to the motor manufacturer's recommendation. **Example**: If the constant protection level needs to be 115% of the motor nominal current, set parameter 3007 value to 91% (= 115/127·100%). 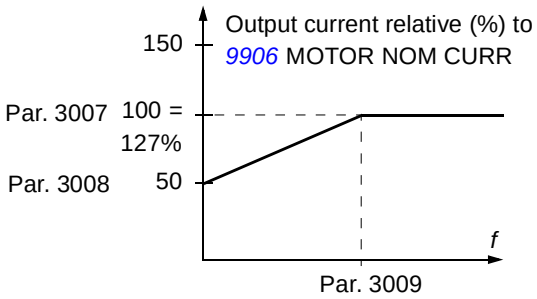 	100%
	50.…150%	Allowed continuous motor load relative to the nominal motor current	
3008	ZERO SPEED LOAD	Defines the load curve together with parameters *3007* MOT LOAD CURVE and *3009* BREAK POINT FREQ.	70%
	25.…150%	Allowed continuous motor load at zero speed in percent of the nominal motor current	
3009	BREAK POINT FREQ	Defines the load curve together with parameters *3007* MOT LOAD CURVE and *3008* ZERO SPEED LOAD. Example: Thermal protection trip times when parameters *3006* MOT THERM TIME, *3007* MOT LOAD CURVE and *3008* ZERO SPEED LOAD have default values. 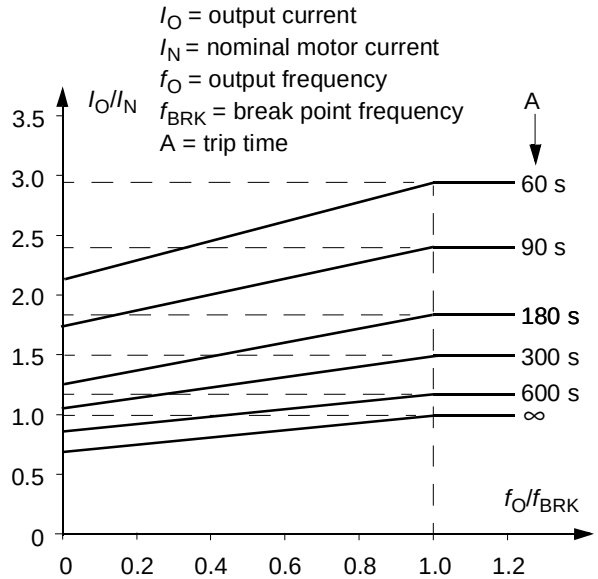 	35 Hz
	1…250 Hz	Drive output frequency at 100% load	

Parameters in the Long parameter mode			
Index	**Name/Selection**	**Description**	**Def**
3010	STALL FUNCTION	Selects how the drive reacts to a motor stall condition. The protection wakes up if the drive has operated in a stall region (see the figure below) longer than the time set by parameter *3012* STALL TIME. 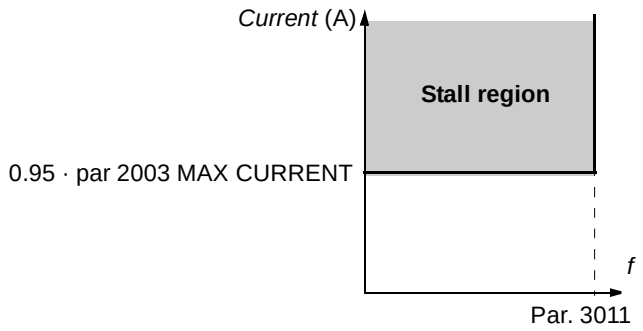 	0 = NOT SEL
	0 = NOT SEL	Protection is inactive.	
	1 = FAULT	The drive trips on fault *MOTOR STALL* (code: *F0012*) and the motor coasts to stop.	
	2 = ALARM	The drive generates alarm *MOTOR STALL* (code: *A2012*).	
3011	STALL FREQUENCY	Defines the frequency limit for the stall function. See parameter *3010* STALL FUNCTION.	20.0 Hz
	0.5…50.0 Hz	Frequency	
3012	STALL TIME	Defines the time for the stall function. See parameter *3010* STALL FUNCTION.	20 s
	10…400 s	Time	
3013	UNDERLOAD FUNC	Selects how the drive reacts to underload. The protection wakes up if - the motor torque falls below the curve selected by parameter *3015* UNDERLOAD CURVE, - output frequency is higher than 10% of the nominal motor frequency and - the above conditions have been valid longer than the time set by parameter *3014* UNDERLOAD TIME.	0 = NOT SEL
	0 = NOT SEL	Protection is inactive.	
	1 = FAULT	The drive trips on fault *UNDERLOAD* (code: *F0017*) and the motor coasts to stop.	
	2 = ALARM	The drive generates alarm *UNDERLOAD* (code: *A2011*).	
3014	UNDERLOAD TIME	Defines the time limit for the underload function. See parameter *3013* UNDERLOAD FUNC.	20 s
	10…400 s	Time limit	

Parameters in the Long parameter mode			
Index	**Name/Selection**	**Description**	**Def**
3015	UNDERLOAD CURVE	Selects the load curve for the underload function. See parameter *3013* UNDERLOAD FUNC. T_M = nominal torque of the motor f_N = nominal frequency of the motor (par. *9907*) 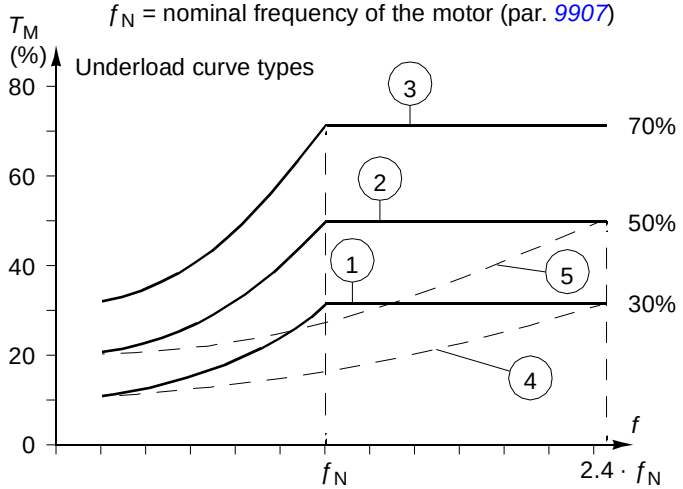 	1
	1…5	Number of the load curve type in the figure	
3016	SUPPLY PHASE	Selects how the drive reacts to supply phase loss, that is when DC voltage ripple is excessive.	0 = FAULT
	0 = FAULT	The drive trips on fault *INPUT PHASE LOSS* (code: *F0022*) and the motor coasts to stop when the DC voltage ripple exceeds 14% of the nominal DC voltage.	
	1 = LIMIT/ALARM	Drive output current is limited and alarm *INPUT PHASE LOSS* (code: *A2026*) is generated when the DC voltage ripple exceeds 14% of the nominal DC voltage. There is a 10 s delay between the activation of the alarm and the output current limitation. The current is limited until the ripple drops under the minimum limit, 0.3 · I_{hd}.	
	2 = ALARM	The drive generates alarm *INPUT PHASE LOSS* (code: *A2026*) when the DC ripple exceeds 14% of the nominal DC voltage.	
3017	EARTH FAULT	Selects how the drive reacts when an earth (ground) fault is detected in the motor or the motor cable. The protection is active only during start. An earth fault in the input power line does not activate the protection **Note:** Disabling earth (ground) fault may void the warranty.	1 = ENABLE
	0 = DISABLE	No action	
	1 = ENABLE	The drive trips on fault *EARTH FAULT* (code: *F0016*).	
3021	AI1 FAULT LIMIT	Defines the fault or alarm level for analog input AI1. If parameter *3001* AI<MIN FUNCTION is set to 1 (FAULT), 2 (CONST SP 7) or 3 (LAST SPEED), the drive generates alarm or fault *AI1 LOSS* (code: *A2006* or *F0007*), when the analog input signal falls below the set level. Do not set this limit below the level defined by parameter *1301* MINIMUM AI1.	0.0%
	0.0…100.0%	Value in percent of the full signal range	

Parameters in the Long parameter mode			
Index	**Name/Selection**	**Description**	**Def**
3023	WIRING FAULT	Selects how the drive reacts when incorrect input power and motor cable connection is detected (that is the input power cable is connected to the motor connection of the drive). **Note:** Disabling wiring fault (ground fault) may void the warranty.	1 = ENABLE
	0 = DISABLE	No action	
	1 = ENABLE	The drive trips on fault *OUTP WIRING* (code *F0035*).	
31 AUTOMATIC RESET		Automatic fault reset. Automatic resets are possible only for certain fault types and when the automatic reset function is activated for that fault type.	
3101	NR OF TRIALS	Defines the number of automatic fault resets the drive performs within the time defined by parameter *3102* TRIAL TIME. If the number of automatic resets exceeds the set number (within the trial time), the drive prevents additional automatic resets and remains stopped. The drive must be reset from the control panel or from a source selected by parameter *1604* FAULT RESET SEL. Example: Three faults have occurred during the trial time defined by parameter *3102* TRIAL TIME. Last fault is reset only if the number defined by parameter 3101 NR OF TRIALS is 3 or more. 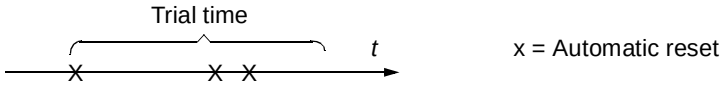	0
	0…5	Number of the automatic resets	
3102	TRIAL TIME	Defines the time for the automatic fault reset function. See parameter *3101* NR OF TRIALS.	30.0 s
	1.0…600.0 s	Time	
3103	DELAY TIME	Defines the time that the drive waits after a fault before attempting an automatic reset. See parameter *3101* NR OF TRIALS. If delay time is set to zero, the drive resets immediately.	0.0 s
	0.0…120.0 s	Time	
3104	AR OVERCURRENT	Activates/deactivates the automatic reset for the overcurrent fault. Automatically resets fault *OVERCURRENT* (code: *F0001*) after the delay set by parameter *3103* DELAY TIME.	0 = DISABLE
	0 = DISABLE	Inactive	
	1 = ENABLE	Active	
3105	AR OVERVOLTAGE	Activates/deactivates the automatic reset for the intermediate link overvoltage fault. Automatically resets fault *DC OVERVOLT* (code: *F0002*) after the delay set by parameter *3103* DELAY TIME.	0 = DISABLE
	0 = DISABLE	Inactive	
	1 = ENABLE	Active	
3106	AR UNDERVOLTAGE	Activates/deactivates the automatic reset for the intermediate link undervoltage fault. Automatically resets fault *DC UNDERVOLT* (code: *F0006*) after the delay set by parameter *3103* DELAY TIME.	0 = DISABLE
	0 = DISABLE	Inactive	
	1 = ENABLE	Active	

Parameters in the Long parameter mode			
Index	**Name/Selection**	**Description**	**Def**
3107	AR AI<MIN	Activates/deactivates the automatic reset for AI<MIN (analog input signal under the allowed minimum level) fault *AI1 LOSS* (code: *F0007*). Automatically resets the fault after the delay set by parameter *3103* DELAY TIME.	0 = DISABLE
	0 = DISABLE	Inactive	
	1 = ENABLE	Active **WARNING!** The drive may restart even after a long stop if the analog input signal is restored. Ensure that the use of this feature will not cause danger.	
3108	AR EXTERNAL FLT	Activates/deactivates the automatic reset for faults *EXT FAULT 1*/*EXT FAULT 2* (code: *F0014*/*F0015*). Automatically resets the fault after the delay set by parameter *3103* DELAY TIME.	0 = DISABLE
	0 = DISABLE	Inactive	
	1 = ENABLE	Active	

Parameters in the Long parameter mode			
Index	**Name/Selection**	**Description**	**Def**
32 SUPERVISION		Signal supervision. The drive monitors whether certain user selectable variables are within the user-defined limits. The user may set limits for speed, current etc. Supervision status can be monitored with relay output. See parameter group *14 RELAY OUTPUTS*.	
3201	SUPERV 1 PARAM	Selects the first supervised signal. Supervision limits are defined by parameters *3202* SUPERV 1 LIM LO and *3203* SUPERV 1 LIM HI. Example 1: If *3202* SUPERV 1 LIM LO ≤ *3203* SUPERV 1 LIM HI **Case A** = *1401* RELAY OUTPUT 1 value is set to SUPRV 1 OVER. Relay energizes when value of the signal selected with *3201* SUPERV 1 PARAM exceeds the supervision limit defined by *3203* SUPERV 1 LIM HI. The relay remains active until the supervised value drops below the low limit defined by *3202* SUPERV 1 LIM LO. **Case B** = *1401* RELAY OUTPUT 1 value is set to SUPRV 1 UNDER. Relay energizes when value of the signal selected with *3201* SUPERV 1 PARAM drops below the supervision limit defined by *3202* SUPERV 1 LIM LO. The relay remains active until the supervised value rises above the high limit defined by *3203* SUPERV 1 LIM HI. 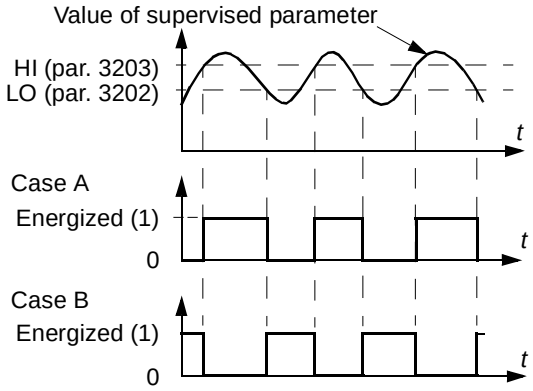 Example 2: If *3202* SUPERV 1 LIM LO > *3203* SUPERV 1 LIM HI The lower limit *3203* SUPERV 1 LIM HI remains active until the supervised signal exceeds the higher limit *3202* SUPERV 1 LIM LO, making it the active limit. The new limit remains active until the supervised signal drops below the lower limit *3203* SUPERV 1 LIM HI, making it the active limit. **Case A** = *1401* RELAY OUTPUT 1 value is set to SUPRV 1 OVER. Relay is energized whenever the supervised signal exceeds the active limit. **Case B** = *1401* RELAY OUTPUT 1 value is set to SUPRV 1 UNDER. Relay is de-energized whenever the supervised signal drops below the active limit. 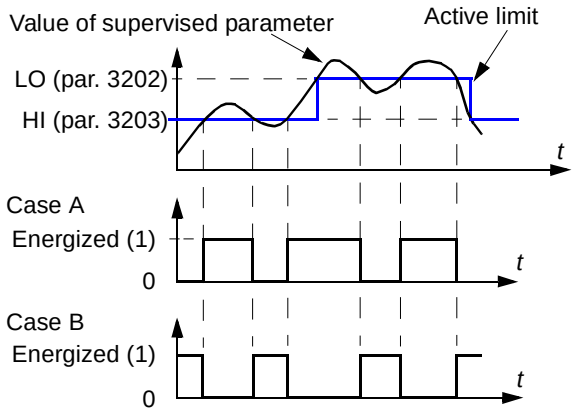 	103

Parameters in the Long parameter mode			
Index	**Name/Selection**	**Description**	**Def**
	0, x…x	Parameter index in group *01 OPERATING DATA*. For example, 102 = *0102* SPEED. 0 = not selected.	
3202	SUPERV 1 LIM LO	Defines the low limit for the first supervised signal selected by parameter *3201* SUPERV 1 PARAM. Supervision wakes up if the value is below the limit.	-
	x…x	Setting range depends on parameter *3201* SUPERV 1 PARAM setting.	-
3203	SUPERV 1 LIM HI	Defines the high limit for the first supervised signal selected by parameter *3201* SUPERV 1 PARAM. Supervision wakes up if the value is above the limit.	-
	x…x	Setting range depends on parameter *3201* SUPERV 1 PARAM setting.	-
3204	SUPERV 2 PARAM	Selects the second supervised signal. Supervision limits are defined by parameters *3205* SUPERV 2 LIM LO and *3206* SUPERV 2 LIM HI. See parameter *3201* SUPERV 1 PARAM.	104
	x…x	Parameter index in group *01 OPERATING DATA*. For example, 102 = *0102* SPEED.	
3205	SUPERV 2 LIM LO	Defines the low limit for the second supervised signal selected by parameter *3204* SUPERV 2 PARAM. Supervision wakes up if the value is below the limit.	-
	x…x	Setting range depends on parameter *3204* SUPERV 2 PARAM setting.	-
3206	SUPERV 2 LIM HI	Defines the high limit for the second supervised signal selected by parameter *3204* SUPERV 2 PARAM. Supervision wakes up if the value is above the limit.	-
	x…x	Setting range depends on parameter *3204* SUPERV 2 PARAM setting.	-
3207	SUPERV 3 PARAM	Selects the third supervised signal. Supervision limits are defined by parameters *3208* SUPERV 3 LIM LO and *3209* SUPERV 3 LIM HI. See parameter *3201* SUPERV 1 PARAM.	105
	x…x	Parameter index in group *01 OPERATING DATA*. For example, 102 = *0102* SPEED.	
3208	SUPERV 3 LIM LO	Defines the low limit for the third supervised signal selected by parameter *3207* SUPERV 3 PARAM. Supervision wakes up if the value is below the limit.	-
	x…x	Setting range depends on parameter *3207* SUPERV 3 PARAM setting.	-
3209	SUPERV 3 LIM HI	Defines the high limit for the third supervised signal selected by parameter *3207* SUPERV 3 PARAM. Supervision wakes up if the value is above the limit.	-
	x…x	Setting range depends on parameter *3207* SUPERV 3 PARAM setting.	-
33 INFORMATION		Firmware package version, test date etc.	
3301	FIRMWARE	Displays the version of the firmware package.	
	0000…FFFF (hex)	For example, 135B hex	
3302	LOADING PACKAGE	Displays the version of the loading package.	Type dependent
	2001…20FF hex	2021 hex = ACS150-0nE- 2022 hex = ACS150-0nU-	
3303	TEST DATE	Displays the test date.	00.00
		Date value in format YY.WW (year, week)	

Parameters in the Long parameter mode			
Index	**Name/Selection**	**Description**	**Def**
3304	DRIVE RATING	Displays the drive current and voltage ratings.	0x0000 hex
	0000…FFFF hex	Value in format XXXY hex: XXX = Nominal current of the drive in amperes. An “A” indicates decimal point. For example if XXX is 8A8, nominal current is 8.8 A. Y = Nominal voltage of the drive: 1 = 1-phase 200…240 V 2 = 3-phase 200…240 V 4 = 3-phase 380…480 V	
34 PANEL DISPLAY		Selection of actual signals to be displayed on the panel	
3401	SIGNAL1 PARAM	Selects the first signal to be displayed on the control panel in the Output mode. 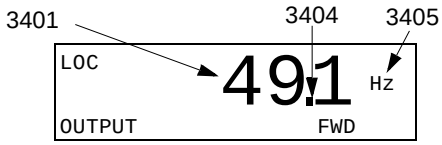 	103
	0, 101…162	Parameter index in group *01 OPERATING DATA*. For example, 102 = *0102* SPEED. If value is set to 0, no signal is selected. If parameter *3401* SIGNAL1 PARAM, *3408* SIGNAL2 PARAM and *3415* SIGNAL3 PARAM values are all set to 0, n.A. is displayed.	
3402	SIGNAL1 MIN	Defines the minimum value for the signal selected by parameter *3401* SIGNAL1 PARAM. 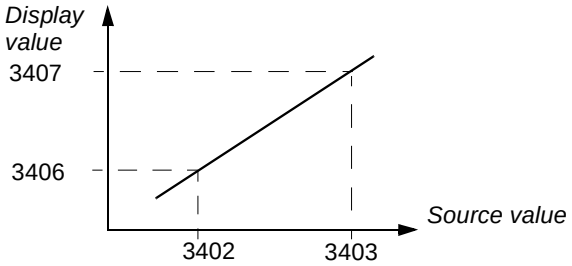 **Note:** Parameter is not effective if parameter *3404* OUTPUT1 DSP FORM setting is 9 (DIRECT).	-
	x…x	Setting range depends on parameter *3401* SIGNAL1 PARAM setting.	-
3403	SIGNAL1 MAX	Defines the maximum value for the signal selected by parameter *3401* SIGNAL1 PARAM. See the figure for parameter *3402* SIGNAL1 MIN. **Note:** Parameter is not effective if parameter *3404* OUTPUT1 DSP FORM setting is 9 (DIRECT).	-
	x…x	Setting range depends on parameter *3401* SIGNAL1 PARAM setting.	-

Parameters in the Long parameter mode			
Index	**Name/Selection**	**Description**	**Def**
3404	OUTPUT1 DSP FORM	Defines the format for the displayed signal selected by parameter *3401* SIGNAL1 PARAM.	9 = DIRECT
	0 = +/-0	Signed/Unsigned value. Unit is selected by parameter *3405* OUTPUT 1 UNIT. Example PI (3.14159):	
	1 = +/-0.0		
	2 = +/-0.00		
	3 = +/-0.000		
	4 = +0		
	5 = +0.0		
	6 = +0.00		
	7 = +0.000		
	8 = BAR METER	Bar graph is not available for this application.	
	9 = DIRECT	Direct value. Decimal point location and units of measure are the same as for the source signal. **Note:** Parameters *3402*, *3403* and *3405*...*3407* are not effective.	
3405	OUTPUT1 UNIT	Selects the unit for the displayed signal selected by parameter *3401* SIGNAL1 PARAM. **Note:** Parameter is not effective if parameter *3404* OUTPUT1 DSP FORM setting is 9 (DIRECT). **Note:** Unit selection does not convert values.	-
	0 = NO UNIT	No unit selected	
	1 = A	Ampere	
	2 = V	Volt	
	3 = Hz	Hertz	
	4 = %	Percent	
	5 = s	Second	
	6 = h	Hour	
	7 = rpm	Revolutions per minute	
	8 = kh	Kilohour	
	9 = °C	Celsius	
	11 = mA	Milliampere	
	12 = mV	Millivolt	
3406	OUTPUT1 MIN	Sets the minimum display value for the signal selected by parameter *3401* SIGNAL1 PARAM. See parameter *3402* SIGNAL1 MIN. **Note:** Parameter is not effective if parameter *3404* OUTPUT1 DSP FORM setting is 9 (DIRECT).	-
	x…x	Setting range depends on parameter *3401* SIGNAL1 PARAM setting.	-
3407	OUTPUT1 MAX	Sets the maximum display value for the signal selected by parameter *3401* SIGNAL1 PARAM. See parameter *3402* SIGNAL1 MIN. **Note:** Parameter is not effective if parameter *3404* OUTPUT1 DSP FORM setting is 9 (DIRECT).	-
	x…x	Setting range depends on parameter *3401* SIGNAL1 PARAM setting.	-

3404 value	Display	Range
+/-0	± 3	-32768...+32767
+/-0.0	± 3.1	
+/-0.00	± 3.14	
+/-0.000	± 3.142	
+0	3	0....65535
+0.0	3.1	
+0.00	3.14	
+0.000	3.142	

Parameters in the Long parameter mode			
Index	**Name/Selection**	**Description**	**Def**
3408	SIGNAL2 PARAM	Selects the second signal to be displayed on the control panel in the Output mode. See parameter *3401* SIGNAL1 PARAM.	104
	0, 102…162	Parameter index in group *01 OPERATING DATA*. For example, 102 = *0102* SPEED. If value is set to 0, no signal is selected. If parameter *3401* SIGNAL1 PARAM, *3408* SIGNAL2 PARAM and *3415* SIGNAL3 PARAM values are all set to 0, n.A. is displayed.	
3409	SIGNAL2 MIN	Defines the minimum value for the signal selected by parameter *3408* SIGNAL2 PARAM. See parameter *3402* SIGNAL1 MIN.	-
	x…x	Setting range depends on parameter *3408* setting.	-
3410	SIGNAL2 MAX	Defines the maximum value for the signal selected by parameter *3408* SIGNAL2 PARAM. See parameter *3402* SIGNAL1 MIN.	-
	x…x	Setting range depends on parameter *3408* SIGNAL2 PARAM setting.	-
3411	OUTPUT2 DSP FORM	Defines the format for the displayed signal selected by parameter *3408* SIGNAL2 PARAM.	9 = DIRECT
		See parameter *3404* OUTPUT1 DSP FORM.	-
3412	OUTPUT2 UNIT	Selects the unit for the displayed signal selected by parameter *3408* SIGNAL2 PARAM.	-
		See parameter *3405* OUTPUT1 UNIT.	-
3413	OUTPUT2 MIN	Sets the minimum display value for the signal selected by parameter *3408* SIGNAL2 PARAM. See parameter *3402* SIGNAL1 MIN.	-
	x…x	Setting range depends on parameter *3408* SIGNAL2 PARAM setting.	-
3414	OUTPUT2 MAX	Sets the maximum display value for the signal selected by parameter *3408* SIGNAL2 PARAM. See parameter *3402* SIGNAL1 MIN.	-
	x…x	Setting range depends on parameter *3408* SIGNAL2 PARAM setting.	-
3415	SIGNAL3 PARAM	Selects the third signal to be displayed on the control panel in the Output mode. See parameter *3401* SIGNAL1 PARAM.	105
	0, 102…162	Parameter index in group *01 OPERATING DATA*. For example, 102 = *0102* SPEED. If value is set to 0, no signal is selected. If parameter *3401* SIGNAL1 PARAM, *3408* SIGNAL2 PARAM and *3415* SIGNAL3 PARAM values are all set to 0, n.A. is displayed.	
3416	SIGNAL3 MIN	Defines the minimum value for the signal selected by parameter *3415* SIGNAL3 PARAM. See parameter *3402* SIGNAL1 MIN.	-
	x…x	Setting range depends on parameter *3415* SIGNAL 3 PARAM setting.	-
3417	SIGNAL3 MAX	Defines the maximum value for the signal selected by parameter *3415* SIGNAL3 PARAM. See parameter *3402* SIGNAL1 MIN.	-
	x…x	Setting range depends on parameter *3415* SIGNAL3 PARAM setting.	-
3418	OUTPUT3 DSP FORM	Defines the format for the displayed signal selected by parameter *3415* SIGNAL3 PARAM.	9 = DIRECT
		See parameter *3404* OUTPUT1 DSP FORM.	-
3419	OUTPUT3 UNIT	Selects the unit for the displayed signal selected by parameter *3415* SIGNAL3 PARAM.	-
		See parameter *3405* OUTPUT1 UNIT.	-
3420	OUTPUT3 MIN	Sets the minimum display value for the signal selected by parameter *3415* SIGNAL3 PARAM. See parameter *3402* SIGNAL1 MIN.	-
	x…x	Setting range depends on parameter *3415* SIGNAL3 PARAM setting.	-

Parameters in the Long parameter mode			
Index	**Name/Selection**	**Description**	**Def**
3421	OUTPUT3 MAX	Sets the maximum display value for the signal selected by parameter *3415* SIGNAL3 PARAM. See parameter *3402* SIGNAL1 MIN.	-
	x…x	Setting range depends on parameter *3415* SIGNAL3 PARAM setting.	-
40 PROCESS PID SET 1		Process PID (PID1) control parameter set 1.	
4001	GAIN	Defines the gain for the process PID controller. High gain may cause speed oscillation.	1.0
	0.1…100.0	Gain. When value is set to 0.1, the PID controller output changes one-tenth as much as the error value. When value is set to 100, the PID controller output changes one hundred times as much as the error value.	
4002	INTEGRATION TIME	Defines the integration time for the process PID1 controller. The integration time defines the rate at which the controller output changes when the error value is constant. The shorter the integration time, the faster the continuous error value is corrected. Too short an integration time makes the control unstable. 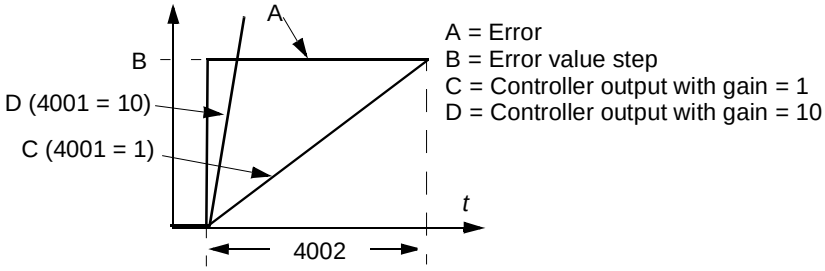 	60.0 s
	0.0…3600.0 s	Integration time. If parameter value is set to zero, integration (I-part of the PID controller) is disabled.	
4003	DERIVATION TIME	Defines the derivation time for the process PID controller. Derivative action boosts the controller output if the error value changes. The longer the derivation time, the more the speed controller output is boosted during the change. If the derivation time is set to zero, the controller works as a PI controller, otherwise as a PID controller. The derivation makes the control more responsive for disturbances. The derivative is filtered with a 1-pole filter. Filter time constant is defined by parameter *4004* PID DERIV FILTER. 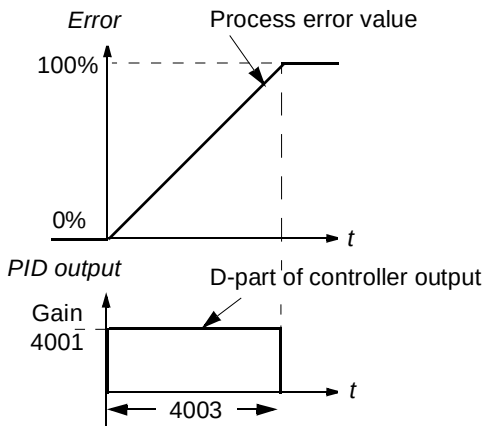 	0.0 s
	0.0…10.0 s	Derivation time. If parameter value is set to zero, the derivative part of the PID controller is disabled.	

Parameters in the Long parameter mode			
Index	**Name/Selection**	**Description**	**Def**
4004	PID DERIV FILTER	Defines the filter time constant for the derivative part of the process PID controller. Increasing the filter time smooths the derivative and reduces noise.	1.0 s
	0.0…10.0 s	Filter time constant. If parameter value is set to zero, the derivative filter is disabled.	
4005	ERROR VALUE INV	Selects the relationship between the feedback signal and drive speed (drive output frequency).	0 = NO
	0 = NO	Normal: A decrease in feedback signal increases drive speed (drive output frequency). Error = Ref - Fbk	
	1 = YES	Inverted: A decrease in feedback signal decreases drive speed (drive output frequency). Error = Fbk - Ref	
4006	UNITS	Selects the unit for PID controller actual values.	4 = %
	0…12	See parameter *3405* OUTPUT1 UNIT selections 0…12 (NO UNIT…mV).	
4007	UNIT SCALE	Defines the decimal point location for the display parameter selected by parameter *4006* UNITS.	1
	0…4	Example PI (3.14159) **4007 value** / **Entry** / **Display** 0 / 00003 / 3 1 / 00031 / 3.1 2 / 00314 / 3.14 3 / 03142 / 3.142 4 / 31416 / 3.1416	
4008	0% VALUE	Defines together with parameter *4009* 100% VALUE the scaling applied to the PID controller's actual values. 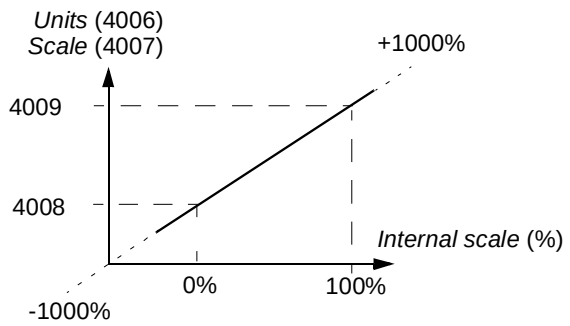 	0
	x…x	Unit and range depend on the unit and scale defined by parameters *4006* UNITS and *4007* UNIT SCALE.	
4009	100% VALUE	Defines together with parameter *4008* 0% VALUE the scaling applied to the PID controller's actual values.	100
	x...x	Unit and range depend on the unit and scale defined by parameters *4006* UNITS and *4007* UNIT SCALE.	
4010	SET POINT SEL	Selects the source for the process PID controller reference signal.	2 = POT
	0 = KEYPAD	Control panel	
	1 = AI1	Analog input AI1	
	2 = POT	Potentiometer	

Parameters in the Long parameter mode			
Index	**Name/Selection**	**Description**	**Def**
	11 = DI3U,4D(RNC)	Digital input DI3: Reference increase. Digital input DI4: Reference decrease. Stop command resets the reference to zero. When this selection becomes active (in change from EXT1 to EXT2), the reference initializes to the value used when this control location (and this selection) was active the last time.	
	12 = DI3U,4D(NC)	Digital input DI3: Reference increase. Digital input DI4: Reference decrease. The program stores the active reference (not reset by a stop command). When this selection becomes active (in change from EXT1 to EXT2), the reference initializes to the value used when this control location (and this selection) was active the last time.	
	14 = AI1+POT	Reference is calculated with the following equation: REF = AI1(%) + POT(%) - 50%	
	15 = AI1*POT	Reference is calculated with the following equation: REF = AI(%) · (POT(%) / 50%)	
	16 = AI1-POT	Reference is calculated with the following equation: REF = AI1(%) + 50% - POT(%)	
	17 = AI1/POT	Reference is calculated with the following equation: REF = AI1(%) · (50% / POT (%))	
	19 = INTERNAL	A constant value defined by parameter *4011* INTERNAL SETPNT	
	31 = DI4U,5D(NC)	See selection DI3U,4D(NC).	
	32 = FREQ INPUT	Frequency input	
4011	INTERNAL SETPNT	Selects a constant value as process PID controller reference, when parameter *4010* SET POINT SEL value is set to 19 (INTERNAL).	40
	x…x	Unit and range depend on the unit and scale defined by parameters *4006* UNITS and *4007* UNIT SCALE.	
4012	SETPOINT MIN	Defines the minimum value for the selected PID reference signal source. See parameter *4010* SET POINT SEL.	0.0%
	-500.0…500.0%	Value in percent. **Example:** Analog input AI1 is selected as the PID reference source (value of parameter *4010* SET POINT SEL is 1 = AI1). The reference minimum and maximum correspond to the *1301* MINIMUM AI1 and *1302* MAXIMUM AI1 settings as follows: 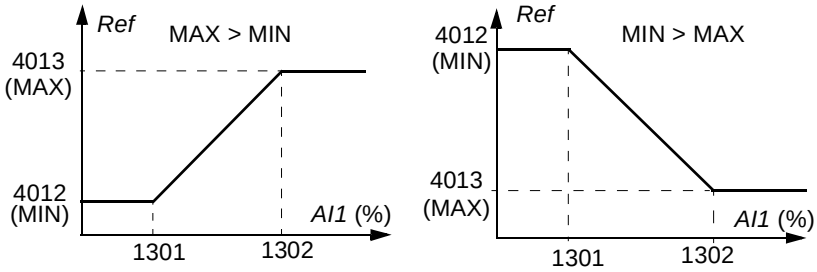 	
4013	SETPOINT MAX	Defines the maximum value for the selected PID reference signal source. See parameters *4010* SET POINT SEL and *4012* SETPOINT MIN.	100.0%
	-500.0…500.0%	Value in percent	
4014	FBK SEL	Selects the process actual value (feedback signal) for the process PID controller: The sources for the variables ACT1 and ACT2 are further defined by parameters *4016* ACT1 INPUT and *4017* ACT2 INPUT.	1 = ACT1
	1 = ACT1	ACT1	
	2 = ACT1-ACT2	Subtraction of ACT1 and ACT 2	

Parameters in the Long parameter mode			
Index	**Name/Selection**	**Description**	**Def**
	3 = ACT1+ACT2	Addition of ACT1 and ACT2	
	4 = ACT1*ACT2	Multiplication of ACT1 and ACT2	
	5 = ACT1/ACT2	Division of ACT1 and ACT2	
	6 = MIN(ACT1,2)	Selects the smaller of ACT1 and ACT2	
	7 = MAX(ACT1,2)	Selects the higher of ACT1 and ACT2	
	8 = sqrt(ACT1-2)	Square root of the subtraction of ACT1 and ACT2	
	9 = sqA1+sqA2	Addition of the square root of ACT1 and the square root of ACT2	
	10 = sqrt(ACT1)	Square root of ACT1	
4015	FBK MULTIPLIER	Defines an extra multiplier for the value defined by parameter *4014* FBK SEL. Parameter is used mainly in applications where feedback value is calculated from an other variable (for example, flow from pressure difference).	0.000
	-32.768…32.767	Multiplier. If parameter value is set to zero, no multiplier is used.	
4016	ACT1 INPUT	Defines the source for actual value 1 (ACT1). See also parameter *4018* ACT1 MINIMUM.	1 = AI1
	1 = AI1	Uses analog input 1 for ACT1	
	2 = POT	Uses potentiometer for ACT1	
	3 = CURRENT	Uses current for ACT1	
	4 = TORQUE	Uses torque for ACT1	
	5 = POWER	Uses power for ACT1	
4017	ACT2 INPUT	Defines the source for actual value 2 (ACT2). See also parameter *4020* ACT2 MINIMUM.	1 = AI1
		See parameter *4016* ACT1 INPUT.	
4018	ACT1 MINIMUM	Sets the minimum value for ACT1. Scales the source signal used as the actual value ACT1 (defined by parameter *4016* ACT1 INPUT).	0%

Par 4016	Source	Source min.	Source max.
1	Analog input 1	1301 MINIMUM AI1	1302 MAXIMUM AI1
2	Potentiometer	-	-
3	Current	0	2 · nominal current
4	Torque	-2 · nominal torque	2 · nominal torque
5	Power	-2 · nominal power	2 · nominal power

A= Normal; B = Inversion (ACT1 minimum > ACT1 maximum)

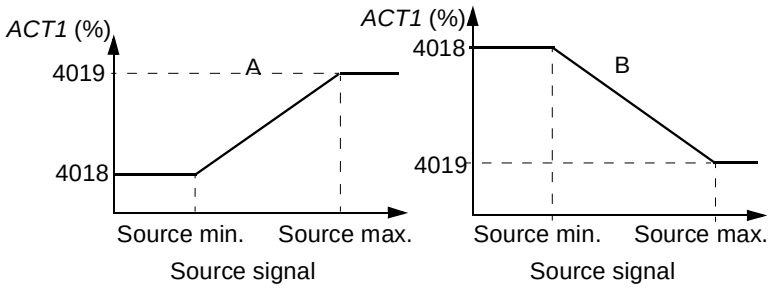

	-1000…1000%	Value in percent	

Parameters in the Long parameter mode			
Index	**Name/Selection**	**Description**	**Def**
4019	ACT1 MAXIMUM	Defines the maximum value for the variable ACT1 if an analog input is selected as a source for ACT1. See parameter *4016* ACT1 INPUT. The minimum (*4018* ACT1 MINIMUM) and maximum settings of ACT1 define how the voltage/current signal received from the measuring device is converted to a percentage value used by the process PID controller. See parameter *4018* ACT1 MINIMUM.	100%
	-1000…1000%	Value in percent	
4020	ACT2 MINIMUM	See parameter *4018* ACT1 MINIMUM.	0%
	-1000…1000%	See parameter *4018* ACT1 MINIMUM.	
4021	ACT2 MAXIMUM	See parameter *4019* ACT1 MAXIMUM.	100%
	-1000…1000%	See parameter *4019* ACT1 MAXIMUM.	
4022	SLEEP SELECTION	Activates the sleep function and selects the source for the activation input.	0 = NOT SEL
	0 = NOT SEL	No sleep function selected	
	1 = DI1	The function is activated/deactivated through digital input DI1. 1 = activation, 0 = deactivation. The internal sleep criteria set by parameters *4023* PID SLEEP LEVEL and *4025* WAKE-UP DEV are not effective. The sleep start and stop delay parameters *4024* PID SLEEP DELAY and *4026* WAKE-UP DELAY are effective.	
	2 = DI2	See selection 1 (DI1).	
	3 = DI3	See selection 1 (DI1).	
	4 = DI4	See selection 1 (DI1).	
	5 = DI5	See selection 1 (DI1).	
	7 = INTERNAL	Activated and deactivated automatically as defined by parameters *4023* PID SLEEP LEVEL and *4025* WAKE-UP DEV.	
	-1 = DI1(INV)	The function is activated/deactivated through inverted digital input DI1. 1 = deactivation, 0 = activation. The internal sleep criteria set by parameters *4023* PID SLEEP LEVEL and *4025* WAKE-UP DEV are not effective. The sleep start and stop delay parameters *4024* PID SLEEP DELAY and *4026* WAKE-UP DELAY are effective.	
	-2 = DI2(INV)	See selection DI1(INV).	
	-3 = DI3(INV)	See selection DI1(INV).	
	-4 = DI4(INV)	See selection DI1(INV).	
	-5 = DI5(INV)	See selection DI1(INV).	

Parameters in the Long parameter mode			
Index	**Name/Selection**	**Description**	**Def**
4023	PID SLEEP LEVEL	Defines the start limit for the sleep function. If the motor speed is below a set level (*4023*) longer than the sleep delay (*4024*), the drive shifts to the sleeping mode: The motor is stopped and the control panel shows alarm *PID SLEEP* (code: *A2018 1)*). Parameter *4022* SLEEP SELECTION must be set to 7 (INTERNAL). 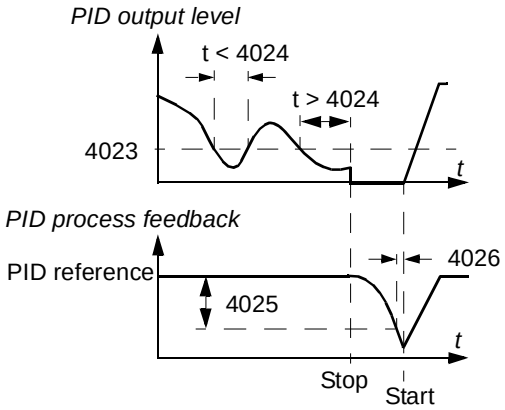 	0.0 Hz
	0.0…500.0 Hz	Sleep start level	
4024	PID SLEEP DELAY	Defines the delay for the sleep start function. See parameter *4023* PID SLEEP LEVEL. When the motor speed falls below the sleep level, the counter starts. When the motor speed exceeds the sleep level, the counter is reset.	60.0 s
	0.0…3600.0 s	Sleep start delay	
4025	WAKE-UP DEV	Defines the wake-up deviation for the sleep function. The drive wakes up if the process actual value deviation from the PID reference value exceeds the set wake-up deviation (*4025*) longer than the wake-up delay (*4026*). Wake-up level depends on parameter *4005* ERROR VALUE INV settings. If parameter *4005* ERROR VALUE INV is set to 0: Wake-up level = PID reference (*4010*) - Wake-up deviation (*4025*). If parameter *4005* ERROR VALUE INV is set to 1: Wake-up level = PID reference (*4010*) + Wake-up deviation (*4025*) 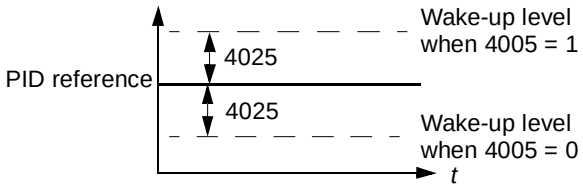 See also figures for parameter *4023* PID SLEEP LEVEL.	0
	x…x	Unit and range depend on the unit and scale defined by parameters *4026* WAKE-UP DELAY and *4007* UNIT SCALE.	
4026	WAKE-UP DELAY	Defines the wake-up delay for the sleep function. See parameter *4023* PID SLEEP LEVEL.	0.50 s
	0.00…60.00 s	Wake-up delay	
99 START-UP DATA		Application macro. Definition of motor set-up data.	
9902	APPLIC MACRO	Selects the application macro or activates FlashDrop parameter values. See chapter *Application macros* on page *69*.	1 = ABB STANDARD
	1 = ABB STANDARD	Standard macro for constant speed applications	

Parameters in the Long parameter mode			
Index	**Name/Selection**	**Description**	**Def**
	2 = 3-WIRE	3-wire macro for constant speed applications	
	3 = ALTERNATE	Alternate macro for start forward and start reverse applications	
	4 = MOTOR POT	Motor potentiometer macro for digital signal speed control applications	
	5 = HAND/AUTO	Hand/Auto macro to be used when two control devices are connected to the drive: - Device 1 communicates through the interface defined by external control location EXT1. - Device 2 communicates through the interface defined by external control location EXT2. EXT1 or EXT2 is active at a time. Switching between EXT1/2 through digital input.	
	6 = PID CONTROL	PID control. For applications in which the drive controls a process value. For example, pressure control by the drive running the pressure boost pump. Measured pressure and the pressure reference are connected to the drive.	
	31 = LOAD FD SET	FlashDrop parameter values as defined by the FlashDrop file. Parameter view is selected by parameter *1611* PARAMETER VIEW. FlashDrop is an optional device for fast copying of parameters to unpowered drives. FlashDrop allows easy customisation of the parameter list, for example, selected parameters can be hidden. For more information, see *MFDT-01 FlashDrop user's manual* (3AFE68591074 [English]).	
	0 = USER S1 LOAD	User 1 macro loaded into use. Before loading, check that the saved parameter settings and the motor model are suitable for the application.	
	-1 = USER S1 SAVE	Save User 1 macro. Stores the current parameter settings and the motor model.	
	-2 = USER S2 LOAD	User 2 macro loaded into use. Before loading, check that the saved parameter settings and the motor model are suitable for the application.	
	-3 = USER S2 SAVE	Save User 2 macro. Stores the current parameter settings and the motor model.	
	-4 = USER S3 LOAD	User 3 macro loaded into use. Before loading, check that the saved parameter settings and the motor model are suitable for the application.	
	-5 = USER S3 SAVE	Save User 3 macro. Stores the current parameter settings and the motor model.	

Parameters in the Long parameter mode			
Index	**Name/Selection**	**Description**	**Def**
9905	MOTOR NOM VOLT	Defines the nominal motor voltage. Must be equal to the value on the motor rating plate. The drive cannot supply the motor with a voltage greater than the input power voltage. Note that the output voltage is not limited by the nominal motor voltage but increased linearly up to the value of the input voltage. 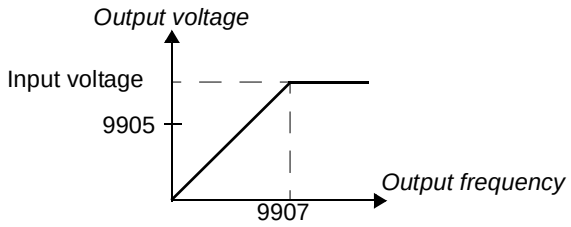 **WARNING!** Never connect a motor to a drive which is connected to power line with voltage level higher than the rated motor voltage.	200 V E units: 200 V 230 V U units: 230 V 400 V E units: 400 V 460 V U units: 460 V
	200 V E units/ 230 U units: 100...300 V 400 V E units / 460 V U units: 230...690 V	Voltage. **Note:** The stress on the motor insulations is always dependent on the drive supply voltage. This also applies to the case where the motor voltage rating is lower than the rating of the drive and the supply of the drive.	
9906	MOTOR NOM CURR	Defines the nominal motor current. Must be equal to the value on the motor rating plate.	I_{2N}
	0.2…2.0 · I_{2N}	Current	
9907	MOTOR NOM FREQ	Defines the nominal motor frequency, that is the frequency at which the output voltage equals the motor nominal voltage: Field weakening point = Nom. frequency · Supply voltage / Mot nom. voltage	E: 50.0 Hz / U: 60.0 Hz
	10.0…500.0 Hz	Frequency	
9908	MOTOR NOM SPEED	Defines the nominal motor speed. Must be equal to the value on the motor rating plate.	Type dependent
	50…30000 rpm	Speed	
9909	MOTOR NOM POWER	Defines the nominal motor power. Must equal the value on the motor rating plate.	P_N
	0.2…3.0 · P_N kW/hp	Power	

Fault tracing

What this chapter contains

The chapter tells how to reset faults and view fault history. It also lists all alarm and fault messages including the possible cause and corrective actions.

Safety

WARNING! Only qualified electricians are allowed to maintain the drive. Read the safety instructions in chapter *Safety* on page *11* before you work on the drive.

Alarm and fault indications

An alarm or fault message on the panel display indicates abnormal drive status. Using the information given in this chapter most alarm and fault causes can be identified and corrected. If not, contact an ABB representative.

How to reset

The drive can be reset either by pressing the keypad key on the control panel, through digital input, or by switching the supply voltage off for a while. When the fault has been removed, the motor can be restarted.

Fault history

When a fault is detected, it is stored in the fault history. The latest faults are stored together with a time stamp.

Parameters *0401* LAST FAULT, *0412* PREVIOUS FAULT 1 and *0413* PREVIOUS FAULT 2 store the most recent faults. Parameters *0404*...*0409* show drive operation data at the time the latest fault occurred.

Alarm messages generated by the drive

CODE	ALARM	CAUSE	WHAT TO DO
A2001	OVERCURRENT (programmable fault function, parameter *1610* DISPLAY ALARMS)	Output current limit controller is active.	Check motor load. Check acceleration time (parameters *2202* ACCELER TIME 1 and *2205* ACCELER TIME 2). Check motor and motor cable (including phasing). Check ambient conditions. Load capacity decreases if installation site ambient temperature exceeds 40 °C. See section *Derating* on page *138*.
A2002	OVERVOLTAGE (programmable fault function, parameter *1610* DISPLAY ALARMS)	DC overvoltage controller is active.	Check deceleration time (parameters *2203* DECELER TIME 1 and *2206* DECELER TIME 2). Check input power line for static or transient overvoltage.
A2003	UNDERVOLTAGE (programmable fault function, parameter *1610* DISPLAY ALARMS)	DC undervoltage controller is active.	Check input power supply.
A2004	DIRLOCK	Change of direction is not allowed.	Check parameter *1003* DIRECTION settings.
A2006	AI1 LOSS (programmable fault function, parameters *3001* AI<MIN FUNCTION, *3021* AI1 FAULT LIMIT)	Analog input AI1 signal has fallen below limit defined by parameter *3021* AI1 FAULT LIMIT.	Check fault function parameter settings. Check for proper analog control signal levels. Check connections.
A2009	DEVICE OVERTEMP	Drive IGBT temperature is excessive. Alarm limit is 120 °C.	Check ambient conditions. See also section *Derating* on page *138*. Check air flow and fan operation. Check motor power against drive power.
A2010	MOTOR TEMP (programmable fault function, parameters *3005*...*3009*)	Motor temperature is too high (or appears to be too high) due to excessive load, insufficient motor power, inadequate cooling or incorrect start-up data.	Check motor ratings, load and cooling. Check start-up data. Check fault function parameter settings. Let motor cool down. Ensure proper motor cooling: Check cooling fan, clean cooling surfaces, etc.
A2011	UNDERLOAD (programmable fault function, parameters *3013*...*3015*)	Motor load is too low due to, for example, release mechanism in driven equipment.	Check for problem in driven equipment. Check fault function parameter settings. Check motor power against drive power.
A2012	MOTOR STALL (programmable fault function, parameters *3010*...*3012*)	Motor is operating in stall region due to, for example, excessive load or insufficient motor power.	Check motor load and drive ratings. Check fault function parameter settings.
A2013 1)	AUTORESET	Automatic reset alarm	Check parameter group *31 AUTOMATIC RESET* settings.

CODE	ALARM	CAUSE	WHAT TO DO
A2017	OFF BUTTON	Drive stop command has been given from control panel when local control lock is active.	Disable the local control mode lock by parameter *1606* LOCAL LOCK and retry.
A2018 [1)]	PID SLEEP	Sleep function has entered the sleeping mode.	See parameter group *40 PROCESS PID SET 1*.
A2023	EMERGENCY STOP	Drive has received emergency stop command and ramps to stop according to ramp time defined by parameter *2208* EMERG DEC TIME.	Check that it is safe to continue operation. Return emergency stop push button to normal position.
A2026	INPUT PHASE LOSS (programmable fault function, parameter *3016* SUPPLY PHASE)	Intermediate circuit DC voltage is oscillating due to missing input power line phase or blown fuse. Alarm is generated when DC voltage ripple exceeds 14% of nominal DC voltage.	Check input power line fuses. Check for input power supply imbalance. Check fault function parameter setting.

[1)] Even when the relay output is configured to indicate alarm conditions (for example, parameter *1401* RELAY OUTPUT 1 = 5 [ALARM] or 16 [FLT/ALARM]), this alarm is not indicated by a relay output.

CODE	CAUSE	WHAT TO DO
A5011	Drive is controlled from another source.	Change drive control to the local control mode.
A5012	Direction of rotation is locked.	Enable change of direction. See parameter *1003* DIRECTION.
A5013	Panel control is disabled because start inhibit is active.	Start from the panel is not possible. Reset the emergency stop command or remove the 3-wire stop command before starting from the panel. See section *3-wire macro* on page *72* and parameters *1001* EXT1 COMMANDS, *1002* EXT2 COMMANDS and *2109* EMERG STOP SEL.
A5014	Panel control is disabled because of drive fault.	Reset drive fault and retry.
A5015	Panel control is disabled because the local control mode lock is active.	Deactivate the local control mode lock and retry. See parameter *1606* LOCAL LOCK.
A5019	Writing non-zero parameter value is prohibited.	Only parameter reset is allowed.
A5022	Parameter is write protected.	Parameter value is read-only and cannot be changed.
A5023	Parameter change is not allowed, when drive is running.	Stop drive and change parameter value.
A5024	Drive is executing task.	Wait until task is completed.
A5026	Value is at or below minimum limit.	Contact your local ABB representative.
A5027	Value is at or above maximum limit.	Contact your local ABB representative.
A5028	Invalid value	Contact your local ABB representative.
A5029	Memory is not ready.	Retry.
A5030	Invalid request	Contact your local ABB representative.
A5031	Drive is not ready for operation, for example, due to low DC voltage.	Check input power supply.
A5032	Parameter error	Contact your local ABB representative.

Fault messages generated by the drive

CODE	FAULT	CAUSE	WHAT TO DO
F0001	OVERCURRENT	Output current has exceeded trip level. Overcurrent trip limit for drive is 325% of drive nominal current.	Check motor load. Check acceleration time (parameters *2202* ACCELER TIME 1 and *2205* ACCELER TIME 2). Check motor and motor cable (including phasing). Check ambient conditions. Load capacity decreases if installation site ambient temperature exceeds 40 °C. See section *Derating* on page *138*.
F0002	DC OVERVOLT	Excessive intermediate circuit DC voltage. DC overvoltage trip limit is 420 V for 200 V drives and 840 V for 400 V drives.	Check that overvoltage controller is on (parameter *2005* OVERVOLT CTRL). Check brake chopper and resistor (if used). DC overvoltage control must be deactivated when brake chopper and resistor are used. Check deceleration time (parameters *2203* DECELER TIME 1 and *2206* DECELER TIME 2). Check input power line for static or transient overvoltage. Retrofit frequency converter with brake chopper and brake resistor.
F0003	DEV OVERTEMP	Drive IGBT temperature is excessive. Fault trip limit is 135 °C.	Check ambient conditions. See also section *Derating* on page *138*. Check air flow and fan operation. Check motor power against drive power.
F0004	SHORT CIRC	Short circuit in motor cable(s) or motor	Check motor and motor cable.
F0006	DC UNDERVOLT	Intermediate circuit DC voltage is not sufficient due to missing input power line phase, blown fuse, rectifier bridge internal fault or too low input power.	Check that undervoltage controller is on (parameter *2006* UNDERVOLT CTRL). Check input power supply and fuses.
F0007	AI1 LOSS (programmable fault function, parameters *3001* AI<MIN FUNCTION, *3021* AI1 FAULT LIMIT)	Analog input AI1 signal has fallen below limit defined by parameter *3021* AI1 FAULT LIMIT.	Check fault function parameter settings. Check for proper analog control signal levels. Check connections.
F0009	MOT OVERTEMP (programmable fault function, parameters *3005*...*3009*)	Motor temperature is too high (or appears to be too high) due to excessive load, insufficient motor power, inadequate cooling or incorrect start-up data.	Check motor ratings, load and cooling. Check start-up data. Check fault function parameter settings. Let motor cool down. Ensure proper motor cooling: Check cooling fan, clean cooling surfaces, etc.
F0012	MOTOR STALL (programmable fault function, parameters *3010*…*3012*)	Motor is operating in stall region due to, for example, excessive load or insufficient motor power.	Check motor load and drive ratings. Check fault function parameter settings.

CODE	FAULT	CAUSE	WHAT TO DO
F0014	EXT FAULT 1 (programmable fault function, parameter *3003* EXTERNAL FAULT 1)	External fault 1	Check external devices for faults. Check fault function parameter setting.
F0015	EXT FAULT 2 (programmable fault function, parameter *3004* EXTERNAL FAULT 2)	External fault 2	Check external devices for faults. Check fault function parameter setting.
F0016	EARTH FAULT (programmable fault function, parameter *3017* EARTH FAULT)	Drive has detected earth (ground) fault in motor or motor cable.	Check motor. Check motor cable. Motor cable length must not exceed maximum specifications. See section *Motor connection data* on page *146*. **Note:** Disabling earth fault (ground fault) may damage drive.
F0017	UNDERLOAD (programmable fault function, parameters *3013*...*3015*)	Motor load is too low due to, for example, release mechanism in driven equipment.	Check for problem in driven equipment. Check fault function parameter settings. Check motor power against drive power.
F0018	THERM FAIL	Drive internal fault. Thermistor used for drive internal temperature measurement is open or short-circuited.	Contact your local ABB representative.
F0021	CURR MEAS	Drive internal fault. Current measurement is out of range.	Contact your local ABB representative.
F0022	INPUT PHASE LOSS (programmable fault function, parameter *3016* SUPPLY PHASE)	Intermediate circuit DC voltage is oscillating due to missing input power line phase or blown fuse. Fault trip occurs when DC voltage ripple exceeds 14% of nominal DC voltage.	Check input power line fuses. Check for input power supply imbalance. Check fault function parameter setting.
F0026	DRIVE ID	Internal drive ID fault	Contact your local ABB representative.
F0027	CONFIG FILE	Internal configuration file error	Contact your local ABB representative.
F0035	OUTP WIRING (programmable fault function, parameter *3023* WIRING FAULT)	Incorrect input power and motor cable connection (that is input power cable is connected to drive motor connection). Fault can be erroneously declared if drive is faulty or input power is delta grounded system and motor cable capacitance is large.	Check input power connections.
F0036	INCOMPATIBLE SW	Loaded software is not compatible.	Contact your local ABB representative.
F0101	SERF CORRUPT	Corrupted Serial Flash chip file system	Contact your local ABB representative.
F0103	SERF MACRO	Active macro file missing from Serial Flash chip	Contact your local ABB representative.

CODE	FAULT	CAUSE	WHAT TO DO
F0201	DSP T1 OVERLOAD	System error	Contact your local ABB representative.
F0202	DSP T2 OVERLOAD		
F0203	DSP T3 OVERLOAD		
F0204	DSP STACK ERROR		
F0206	MMIO ID ERROR	Internal I/O Control board (MMIO) fault	Contact your local ABB representative.
F1000	PAR HZRPM	Incorrect speed/frequency limit parameter setting	Check parameter settings. Following must apply: *2007* MINIMUM FREQ < *2008* MAXIMUM FREQ, *2007* MINIMUM FREQ/*9907* MOTOR NOM FREQ and *2008* MAXIMUM FREQ/*9907* MOTOR NOM FREQ are within range.
F1003	PAR AI SCALE	Incorrect analog input AI signal scaling	Check parameter group *13 ANALOG INPUTS* settings. Following must apply: *1301* MINIMUM AI1 < *1302* MAXIMUM AI1.

Maintenance

What this chapter contains

The chapter contains preventive maintenance instructions.

Maintenance intervals

If installed in an appropriate environment, the drive requires very little maintenance. The table lists the routine maintenance intervals recommended by ABB.

Maintenance	Interval	Instruction
Reforming of capacitors	Every year when stored	See section *Capacitors* on page *135*.
Check of dustiness, corrosion and temperature	Every year	-
Cooling fan replacement (frame sizes R1…R2)	Every three years	See section *Cooling fan* on page *134*.
Check and tightening of the power terminals	Every six years	Check that tightening torque values given in chapter *Technical data* are met.

Consult your local ABB Service representative for more details on the maintenance. On the Internet, go to http://new.abb.com/drives/services and select Drive Services – Maintenance and Field Services.

Cooling fan

The life span of the cooling fan depends on the drive usage and ambient temperature.

Fan failure can be predicted by the increasing noise from the fan bearings. If the drive is operated in a critical part of a process, fan replacement is recommended once these symptoms start appearing. Replacement fans are available from ABB. Do not use other than ABB specified spare parts.

Fan replacement (R1 and R2)

Only frame sizes R1 and R2 include a fan; frame size R0 has natural cooling.

WARNING! Read and follow the instructions in chapter *Safety* on page *11*. Ignoring the instructions can cause physical injury or death, or damage to the equipment.

1. Stop the drive and disconnect it from the AC power source.
2. Remove the hood if the drive has the NEMA 1 option.
3. Lever the fan holder off the drive frame with for example, a screwdriver and lift the hinged fan holder slightly upward from its front edge.

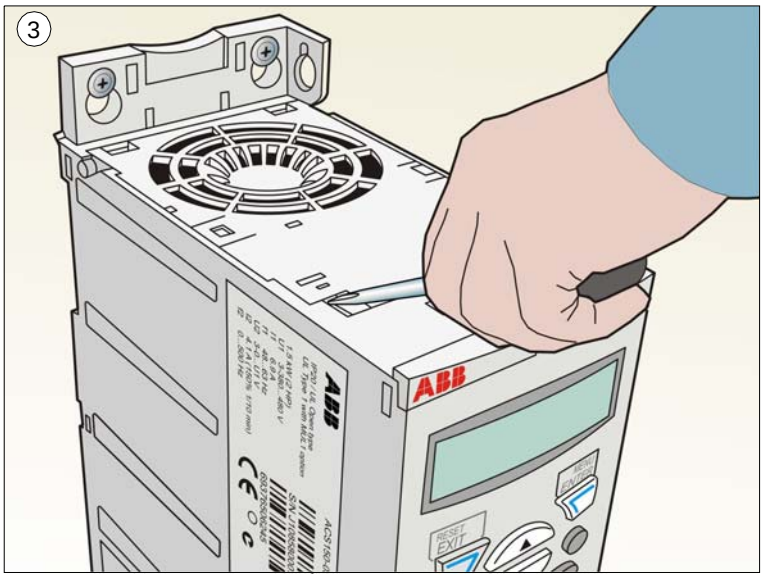

4. Free the fan cable from the clip.
5. Disconnect the fan cable.
6. Remove the fan holder from the hinges.
7. Free the fan cable from the clip in the fan holder.
8. Remove the fan from the holder.

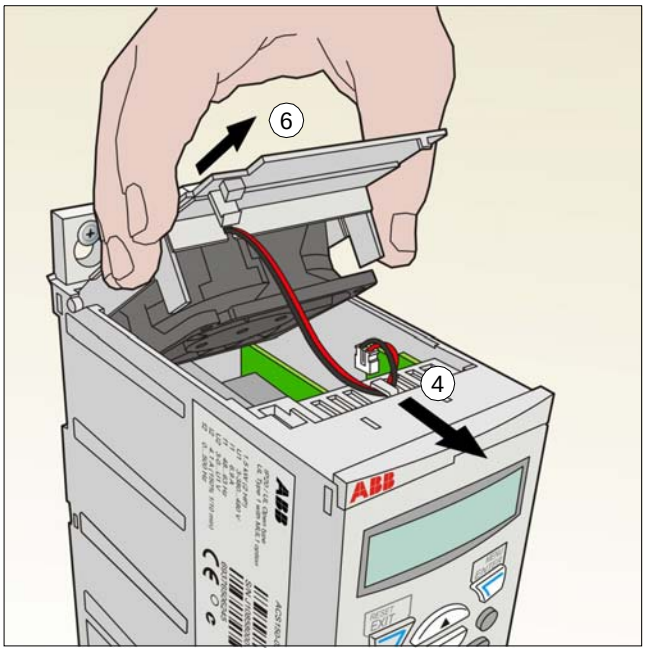

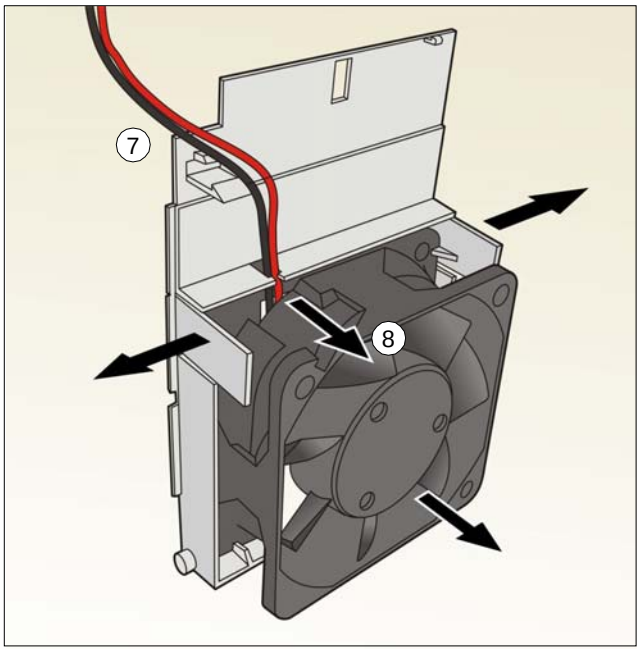

9. Install the fan holder including the fan in reverse order.
10. Restore power.

Capacitors

Reforming the capacitors

The capacitors must be reformed if the drive has been stored for a year. See section *Type designation label* on page *22* for how to find out the manufacturing time from the serial number. For information on reforming the capacitors, refer to *Guide for capacitor reforming in ACS50, ACS55, ACS150, ACS310, ACS320, ACS350, ACS550 and ACH550* (3AFE68735190 [English]), available on the internet (go to http://www.abb.com and enter the code in the Search field.

Power connections

WARNING! Read and follow the instructions in chapter *Safety* on page *11*. Ignoring the instructions can cause physical injury or death, or damage to the equipment.

1. Stop the drive and disconnect it from the power line. Wait for five minutes to let the drive DC capacitors discharge. Ensure by measuring with a multimeter (impedance at least 1 Mohm) that there is no voltage present.
2. Check the tightness of the power cable connections. Use the tightening torques given in section *Terminal and lead-through data for the power cables* on page *145*.
3. Restore power.

Control panel

Cleaning

Use a soft damp cloth to clean the control panel. Avoid harsh cleaners which could scratch the display window.

Technical data

What this chapter contains

The chapter contains the technical specifications of the drive, for example, the ratings, sizes and technical requirements as well as provisions for fulfilling the requirements for CE and other marks.

Ratings

Use the table in *Fuses and alternate short-circuit protection* (page *139*) to correctly size the input cabling as well as input fuses or MMP for branch circuit protection. Sizing will be determined by the actual input current which is dependent on the input line voltage and the input choke selection and rated motor current. If motor rated current is below I2N, I1N is reduced relatively.

Type	Input without choke or reactor		Input with choke or 5% reactor		Output					Frame size
ACS150-	I_{1N}	I_{1N} (480 V)	I_{1N}	I_{1N} (480 V)	I2N	I2,1min/ 10min	I2max	PN		
x = E/U[1)]	A	A	A	A	A	A	A	kW	hp	
1-phase U_N = 200…240 V (200, 208, 220, 230, 240 V)										
01x-02A4-2	6.1	-	4.5	-	2.4	3.6	4.2	0.37	0.5	R0
01x-04A7-2	11.4	-	8.1	-	4.7	7.1	8.2	0.75	1	R1
01x-06A7-2	16.1	-	11.0	-	6.7	10.1	11.7	1.1	1.5	R1
01x-07A5-2	16.8	-	12.0	-	7.5	11.3	13.1	1.5	2	R2
01x-09A8-2	21.0	-	15.0	-	9.8	14.7	17.2	2.2	3	R2
3-phase U_N = 200…240 V (200, 208, 220, 230, 240 V)										
03x-02A4-2	4.3	-	2.2	-	2.4	3.6	4.2	0.37	0.5	R0
03x-03A5-2	6.1	-	3.5	-	3.5	5.3	6.1	0.55	0.75	R0
03x-04A7-2	7.6	-	4.2	-	4.7	7.1	8.2	0.75	1	R1
03x-06A7-2	11.8	-	6.1	-	6.7	10.1	11.7	1.1	1.5	R1
03x-07A5-2	12.0	-	6.9	-	7.5	11.3	13.1	1.5	2	R1
03x-09A8-2	14.3	-	9.2	-	9.8	14.7	17.2	2.2	3	R2
3-phase U_N = 380…480 V (380, 400, 415, 440, 460, 480 V)										
03x-01A2-4	2.2	1.8	1.1	0.9	1.2	1.8	2.1	0.37	0.5	R0
03x-01A9-4	3.6	3.0	1.8	1.5	1.9	2.9	3.3	0.55	0.75	R0
03x-02A4-4	4.1	3.4	2.3	1.9	2.4	3.6	4.2	0.75	1	R1
03x-03A3-4	6.0	5.0	3.1	2.6	3.3	5.0	5.8	1.1	1.5	R1
03x-04A1-4	6.9	5.8	3.5	2.9	4.1	6.2	7.2	1.5	2	R1
03x-05A6-4	9.6	8.0	4.8	4.0	5.6	8.4	9.8	2.2	3	R1
03x-07A3-4	11.6	9.7	6.1	5.1	7.3	11.0	12.8	3	4	R1
03x-08A8-4	13.6	11.3	7.7	6.4	8.8	13.2	15.4	4	5	R1

00353783.xls J

[1)] E = EMC filter connected (metal EMC filter screw installed),

U = EMC filter disconnected (plastic EMC filter screw installed), US parametrization.

Symbols

Input	
I_{1N}	continuous rms input current (for dimensioning cables and fuses)
I_{1N} (480 V)	continuous rms input current (for dimensioning cables and fuses) for drives with 480 V input voltage
Output	
I_{2N}	continuous rms current. 50% overload is allowed for one minute every ten minutes.
$I_{2,1min/10min}$	maximum (50% overload) current allowed for one minute every ten minutes
I_{2max}	maximum output current. Available for two seconds at start, otherwise as long as allowed by the drive temperature.
P_N	typical motor power. The kilowatt ratings apply to most IEC 4-pole motors. The horsepower ratings apply to most NEMA 4-pole motors.
R0…R2	The ACS150 is manufactured in frame sizes R0...R2. Some instructions, technical data and dimensional drawings which only concern certain frame sizes are marked with the symbol of the frame size (R0...R2).

Sizing

Drive sizing is based on the rated motor current and power. To achieve the rated motor power given in the table, the rated current of the drive must be higher than or equal to the rated motor current. Also the rated power of the drive must be higher than or equal to compared to the rated motor power. The power ratings are the same regardless of the supply voltage within one voltage range.

Note 1: The maximum allowed motor shaft power is limited to 1.5 · P_N. If the limit is exceeded, motor torque and current are automatically restricted. The function protects the input bridge of the drive against overload.

Note 2: The ratings apply at ambient temperature of 40 °C (104 °F).

In multimotor systems, the drive output current rating I_{2N} must be equal to or greater than the calculated sum of the input currents of all motors.

Derating

I_{2N}: The load capacity decreases if the installation site ambient temperature exceeds 40 °C (104 °F) or if the altitude exceeds 1000 meters (3300 ft) or the switching frequency is changed from 4 kHz to 8, 12 or 16 kHz.

Temperature derating, I_{2N}

In the temperature range +40 °C…+50 °C (+104 °F…+122 °F), the rated output current (I_{2N}) is decreased by 1% for every additional 1 °C (1.8 °F). The output current is calculated by multiplying the current given in the rating table by the derating factor.

Example If the ambient temperature is 50 °C (+122 °F), the derating factor is 100% - 1 $\frac{\%}{°C}$ · 10 °C = 90% or 0.90. The output current is then 0.90 · I_{2N}.

Altitude derating, I_{2N}

In altitudes 1000…2000 m (3300…6600 ft) above sea level, the derating is 1% for every 100 m (330 ft). For 3-phase 200 V drives, the maximum altitude is 3000 m (9800 ft) above sea level. In altitudes 2000…3000 m (6600…9800 ft), the derating is 2% for every 100 m (330 ft).

Switching frequency derating, I_{2N}

The drive derates itself automatically when parameter *2607* SWITCH FREQ CTRL = 1 (ON).

Switching frequency	Drive voltage rating	
	U_N = 200…240 V	U_N = 380…480 V
4 kHz	No derating	No derating
8 kHz	I_{2N} derated to 90%.	I_{2N} derated to 75% for R0 or to 80% for R1 and R2.
12 kHz	I_{2N} derated to 80%.	I_{2N} derated to 50% for R0, or to 65% for R1 and R2, and the maximum ambient temperature derated to 30 °C (86 °F).
16 kHz	I_{2N} derated to 75%.	I_{2N} derated to 50% and the maximum ambient temperature to 30 °C (86 °F).

When parameter *2607* SWITCH FREQ CTRL = 2 (ON (LOAD)), the drive controls the switching frequency towards the selected switching frequency *2606* SWITCHING FREQ if the drive's internal temperature allows.

Fuses and alternate short-circuit protection

Fuses

The rated fuse currents given in the table are the maximums for the mentioned fuse types. If smaller fuse ratings are used, check that the fuse rms current rating is larger than the rated I_{1N} current given in section *Ratings* on page *137*. If 150% output power is needed, multiply current I_{1N} by 1.5. See also section *Selecting the power cables* on page *30*.

Check that the operating time of the fuse is below 0.5 seconds. The operating time depends on the fuse type, the supply network impedance as well as the cross-sectional area, material and length of the supply cable. In case the 0.5 seconds operating time is exceeded with the gG or T fuses, ultra rapid (aR) fuses reduces in most cases the operating time to an acceptable level.

Note:

- Do not use larger fuses when the input power cable is selected according to this table.
- Choose the correct fuse size according to the actual input current which depends on the input line voltage and the input choke selection.
- You can use other fuse types if they meet the current rating of the fuse in the table and also if the melting curve of the other fuses does not exceed the melting curve of the fuse in the table.

Alternate short-circuit protection

In accordance with the National Electrical Code (NEC), the following ABB type E manual motor protectors can be used as an alternate to the recommended fuses as a means of branch circuit protection:

- MS132 and S1-M3-25
- MS451-xxE
- MS495-xxE.

When the correct ABB type E manual motor protector is selected from the table and used for branch circuit protection, the drive is suitable for use in a circuit capable of delivering not more than 65 kA RMS symmetrical amperes at the drive maximum rated voltage. See the appropriate ratings in the following table.

IP20 / UL type 0 and IP21 / UL type 1 ACS150 drives can use ABB type E manual motor protectors for branch circuit protection. See the MMP rating table for the minimum enclosure volume of IP20 open type ACS150 mounted in an enclosure.

Fuses and MMP's

Type ACS150-	Fuses			MMPs				
	gG	UL Class T or CC (600 V)		Frame	I_{1N}	MMP Type E [3, 4]	Min. Encl. Vol.[6]	
x = E/U[5]	A	min A[2]	max A		A		dm^3	in^3
1-phase U_N = 200…240 V (200, 208, 220, 230, 240 V)								
01x-02A4-2	10	6	10	R0	6.1	MS132-6.3 & S1-M3-25[3]	18.9	1152
01x-04A7-2	16	10	20	R1	11.4	MS451-16E	18.9	1152
01x-06A7-2	16/20[1]	15	25	R1	16.1	MS451-20E	18.9	1152
01x-07A5-2	20/25[1]	15	30	R2	16.8	MS451-20E	-	-
01x-09A8-2	25/35 [1]	15	35	R2	21.0	MS451-26E	-	-
3-phase U_N = 200…240 V (200, 208, 220, 230, 240 V)								
03x-02A4-2	10	3	10	R0	4.3	MS132-6.3 & S1-M3-25[3]	18.9	1152
03x-03A5-2	10	6	10	R0	6.1	MS132-6.3 & S1-M3-25[3]	18.9	1152
03x-04A7-2	10	6	15	R1	7.6	MS132-10 & S1-M3-25[3]	18.9	1152
03x-06A7-2	16	10	15	R1	11.8	MS451-16E	18.9	1152
03x-07A5-2	16	10	15	R1	12.0	MS451-16E	18.9	1152
03x-09A8-2	16	15	20	R2	14.3	MS451-16E	-	-
3-phase U_N = 380…480 V (380, 400, 415, 440, 460, 480 V) (MMP ratings for 480Y/277V only)								
03x-01A2-4	10	2	10	R0	2.2	MS132-2.5 & S1-M3-25[3]	18.9	1152
03x-01A9-4	10	2	10	R0	3.6	MS132-4.0 & S1-M3-25[3]	18.9	1152
03x-02A4-4	10	3	10	R1	4.1	MS132-4.0 & S1-M3-25[3]	18.9	1152
03x-03A3-4	10	3	10	R1	6.0	MS132-6.3 & S1-M3-25[3]	18.9	1152
03x-04A1-4	16	6	15	R1	6.9	MS132-6.3 & S1-M3-25[3]	18.9	1152
03x-05A6-4	16	6	15	R1	9.6	MS132-10 & S1-M3-25[3]	18.9	1152
03x-07A3-4	16	6	20	R1	11.6	MS132-10 & S1-M3-25[3]	18.9	1152
03x-08A8-4	20	10	25	R1	13.6	MS451-16E	18.9	1152

[1] If 50% overload capacity is needed, use the larger fuse as an alternative.

[2] Minimum fuse size can be used with input choke according to the table in *Ratings*.

[3] All manual motor protections listed are type E self-protected up to 65kA.

See ABB publication AC1010 for complete technical data on ABB type E manual motor protectors.

[4] Manual motor protectors may require adjusting the trip limit from the factory setting at or above the drive input. Amps to avoid nuisance tripping. If the manual motor protector is set to the maximum current trip level and nuisance tripping is occurring, then select the next size MMP. (MS132-10 is the highest size in MS132 frame size to meet type E at 65kA, the next size up is the MS451-16E).

[5] E = EMC filter connected (metal EMC filter screw installed),

U = EMC filter disconnected (plastic EMC filter screw installed), U.S parametrization.

Size of copper conductor in cablings

Cable dimensioning for rated currents (I_{1N}) is shown in the table below.

Type	Size of coper conductor in cablings							
ACS150-	**Supply (U1, V1, W1)**		**Motor (U2, V2, W2)**		**PE**		**Brake (BRK+ and BRK-)**	
x = E/U[1)]	mm²	AWG	mm²	AWG	mm²	AWG	mm²	AWG
1-phase U_N = 200…240 V (200, 208, 220, 230, 240 V)								
01x-02A4-2	2.5	14	0.75	18	2.5	14	2.5	14
01x-04A7-2	2.5	14	0.75	18	2.5	14	2.5	14
01x-06A7-2	2.5	10	1.5	14	2.5	10	2.5	12
01x-07A5-2	2.5	10	1.5	14	2.5	10	2.5	12
01x-09A8-2	6	10	2.5	12	6	10	6	12
3-phase U_N = 200…240 V (200, 208, 220, 230, 240 V)								
03x-02A4-2	2.5	14	0.75	18	2.5	14	2.5	14
03x-03A5-2	2.5	14	0.75	18	2.5	14	2.5	14
03x-04A7-2	2.5	14	0.75	18	2.5	14	2.5	14
03x-06A7-2	2.5	12	1.5	14	2.5	12	2.5	12
03x-07A5-2	2.5	12	1.5	14	2.5	12	2.5	12
03x-09A8-2	2.5	12	2.5	12	2.5	12	2.5	12
3-phase U_N = 380…480 V (380, 400, 415, 440, 460, 480 V)								
03x-01A2-4	2.5	14	0.75	18	2.5	14	2.5	14
03x-01A9-4	2.5	14	0.75	18	2.5	14	2.5	14
03x-02A4-4	2.5	14	0.75	18	2.5	14	2.5	14
03x-03A3-4	2.5	12	0.75	18	2.5	12	2.5	12
03x-04A1-4	2.5	12	0.75	18	2.5	12	2.5	12
03x-05A6-4	2.5	12	1.5	14	2.5	12	2.5	12
03x-07A3-4	2.5	12	1.5	14	2.5	12	2.5	12
03x-08A8-4	2.5	12	2.5	12	2.5	12	2.5	12

00353783.xls J

[1)] E = EMC filter connected (metal EMC filter screw installed),
U = EMC filter disconnected (plastic EMC filter screw installed), U.S parameterization.

Dimensions, weights and free space requirements

Dimensions and weights

Frame size	Dimensions and weights											
	IP20 (cabinet) / UL open											
	H1		H2		H3		W		D		Weight	
	mm	in	mm	in	mm	in	mm	in	mm	in	kg	lb
R0	169	6.65	202	7.95	239	9.41	70	2.76	142	5.59	1.1	2.4
R1	169	6.65	202	7.95	239	9.41	70	2.76	142	5.59	1.3/1.2 [1)]	2.9/2.6 [1)]
R2	169	6.65	202	7.95	239	9.41	105	4.13	142	5.59	1.5	3.3

[1)] U_N = 200…240 V: 1.3 kg / 2.9 lb, U_N = 380…480 V: 1.2 kg / 2.6 lb

00353783.xls J

Frame size	Dimensions and weights									
	IP20 / NEMA 1									
	H4		H5		W		D		Weight	
	mm	in	mm	in	mm	in	mm	in	kg	lb
R0	257	10.12	280	11.02	70	2.76	142	5.59	1.5	3.3
R1	257	10.12	280	11.02	70	2.76	142	5.59	1.7/1.6 [2)]	3.7/3.5 [2)]
R2	257	10.12	282	11.10	105	4.13	142	5.59	1.9	4.2

[2)] U_N = 200…240 V: 1.7 kg / 3.7 lb, U_N = 380…480 V: 1.6 kg / 3.5 lb

00353783.xls J

Symbols

IP20 (cabinet) / UL open

H1 height without fastenings and clamping plate

H2 height with fastenings, without clamping plate

H3 height with fastenings and clamping plate

IP20 / NEMA 1

H4 height with fastenings and connection box

H5 height with fastenings, connection box and hood

Free space requirements

Frame size	Free space required					
	Above		Below		On the sides	
	mm	in	mm	in	mm	in
R0…R2	75	3	75	3	0	0

00353783.xls J

Losses, cooling data and noise

Losses and cooling data

Frame size R0 has natural convection cooling. Frame sizes R1…R2 are provided with an internal fan. The air flow direction is from bottom to top.

The table below specifies the heat dissipation in the main circuit at nominal load and in the control circuit with minimum load (I/O not in use) and maximum load (all digital inputs in the on state and the fan in use). The total heat dissipation is the sum of the heat dissipation in the main and control circuits.

Type ACS150- x = E/U	**Heat dissipation**						**Air flow**	
	Main circuit		**Control circuit**					
	Rated I_{1N} and I_{2N}		**Min**		**Max**			
	W	BTU/Hr	W	BTU/Hr	W	BTU/Hr	m^3/h	ft^3/min
1-phase U_N = 200…240 V (200, 208, 220, 230, 240 V)								
01x-02A4-2	25	85	6.3	22	12.3	42	-	-
01x-04A7-2	46	157	9.6	33	16.0	55	24	14
01x-06A7-2	71	242	9.6	33	16.0	55	24	14
01x-07A5-2	73	249	10.6	36	17.1	58	21	12
01x-09A8-2	96	328	10.6	36	17.1	58	21	12
3-phase U_N = 200…240 V (200, 208, 220, 230, 240 V)								
03x-02A4-2	19	65	6.3	22	12.3	42	-	-
03x-03A5-2	31	106	6.3	22	12.3	42	-	-
03x-04A7-2	38	130	9.6	33	16.0	55	24	14
03x-06A7-2	60	205	9.6	33	16.0	55	24	14
03x-07A5-2	62	212	9.6	33	16.0	55	21	12
03x-09A8-2	83	283	10.6	36	17.1	58	21	12
3-phase U_N = 380…480 V (380, 400, 415, 440, 460, 480 V)								
03x-01A2-4	11	38	6.7	23	13.3	45	-	-
03x-01A9-4	16	55	6.7	23	13.3	45	-	-
03x-02A4-4	21	72	10.0	34	17.6	60	13	8
03x-03A3-4	31	106	10.0	34	17.6	60	13	8
03x-04A1-4	40	137	10.0	34	17.6	60	13	8
03x-05A6-4	61	208	10.0	34	17.6	60	19	11
03x-07A3-4	74	253	14.3	49	21.5	73	24	14
03x-08A8-4	94	321	14.3	49	21.5	73	24	14

00353783.xls J

Noise

Frame size	**Noise level**
	dBA
R0	<35
R1	52...55
R2	<62

00353783.xls J

Terminal and lead-through data for the power cables

Frame size	Max cable diameter for NEMA 1		U1, V1, W1, U2, V2, W2, BRK+ and BRK-				PE			
	U1, V1, W1, U2, V2, W2		Max. terminal size flexible/rigid		Tightening torque		Max. clamp size solid or stranded		Tightening torque	
	mm	in	mm^2	AWG	N·m	lbf·in	mm^2	AWG	N·m	lbf·in
R0	16	0.63	4.0/6.0	10	0.8	7	25	3	1.2	11
R1	16	0.63	4.0/6.0	10	0.8	7	25	3	1.2	11
R2	16	0.63	4.0/6.0	10	0.8	7	25	3	1.2	11

00353783.xls J

Terminal data for the control cables

Conductor size						Tightening torque
Solid or stranded		Stranded, with ferrule without plastic sleeve		Stranded, with ferrule with plastic sleeve		
Min/Max	Min/Max	Min/Max	Min/Max	Min/Max	Min/Max	
mm^2	AWG	mm^2	AWG	mm^2	AWG	See section *Control connection data* on page *148*.
0.14/1.5	26/16	0.25/1.5	23/16	0.25/1.5	23/16	

Electric power network specification

Voltage (U_1)	200/208/220/230/240 V AC 1-phase for 200 V AC drives 200/208/220/230/240 V AC 3-phase for 200 V AC drives 380/400/415/440/460/480 V AC 3-phase for 400 V AC drives Regular 10% variation from converter nominal voltage is allowed as default.
Short-circuit capacity	Maximum allowed prospective short-circuit current at the input power connection as defined in IEC 60439-1 and UL 508C is 100 kA. The drive is suitable for use in a circuit capable of delivering not more than 100 kA rms symmetrical amperes at the drive maximum rated voltage.
Frequency	50/60 Hz ± 5%, maximum rate of change 17%/s
Imbalance	Max. ±3% of nominal phase-to-phase input voltage

Motor connection data

Motor type	AC induction motor
Voltage (U_2)	0 to U_1, 3-phase symmetrical, U_{max} at the field weakening point
Short-circuit protection (IEC 61800-5-1, UL 508C)	The motor output is short-circuit proof by IEC 61800-5-1 and UL 508C.
Frequency	Scalar control: 0…500 Hz
Frequency resolution	0.01 Hz
Current	See section *Ratings* on page *137*.
Power limit	$1.5 \cdot P_N$
Field weakening point	10…500 Hz
Switching frequency	4, 8, 12 or 16 kHz
Maximum recommended motor cable length	**Operational functionality and motor cable length** The drive is designed to operate with optimum performance with the following maximum motor cable lengths. The motor cable lengths may be extended with output chokes as shown in the table.

Frame size	Maximum motor cable length	
	m	ft
Standard drive, without external options		
R0	30	100
R1…R2	50	165
With external output chokes		
R0	60	195
R1…R2	100	330

EMC compatibility and motor cable length

To comply with the European EMC Directive (standard IEC/EN 61800-3), use the following maximum motor cable lengths for 4 kHz switching frequency.

All frame sizes	Maximum motor cable length, 4 kHz	
	m	ft
With internal EMC filter		
Second environment (category C3 [1])	30	100
First environment (category C2 [1])	-	-
First environment (category C1 [1])	-	-
With optional external EMC filter		
Second environment (category C3 [1])	30 (at least) [2]	100 (at least) [2]
First environment (category C2 [1])	30 (at least) [2]	100 (at least) [2]
First environment (category C1 [1])	10 (at least) [2]	30 (at least) [2]

[1] See the new terms in section *Definitions* on page *150*.

[2] Maximum motor cable length is determined by the drive's operational factors. Contact your local ABB representative for the exact maximum lengths when using external EMC filters

Note 1: In multimotor systems, the calculated sum of all motor cable lengths must not exceed the maximum motor cable length given in the table.

Note 2: The internal EMC filter must be disconnected by removing the EMC screw (see section *Connection procedure* on page *42*) while using an external EMC filter.

Note 3: Radiated emissions are according to C2 with and without an external EMC filter.

Note 4: Category C1 with conducted emissions only. Radiated emissions are not compatible when measured with standard emission measurement setup and should be checked or measured on cabinet and machine installations case by case.

Control connection data

Analog input X1A: AI(1)	Voltage signal, unipolar	0 (2)…10 V, R_{in} > 312 kohm
	Current signal, unipolar	0 (4)…20 mA, R_{in} = 100 ohm
	Potentiometer reference value	
	(**X1A:** +10V)	10 V ± 1%, max. 10 mA, *R* < 10 kohm
	Resolution	0.1%
	Accuracy	±1%
Auxiliary voltage X1A: +24V		24 V DC ± 10%, max. 200 mA
Digital inputs X1A: DI1...DI5 (frequency input DI5)	Voltage	12…24 V DC with internal or external supply
	Max. voltage for digital inputs 30 V DC	
	Type	PNP and NPN
	Input impedance	2.4 kohm
Frequency input X1A: DI5	DI5 can be used either as a digital or as a frequency input.	
	Frequency input	Pulse train 0…16 kHz (DI5 only)
Relay output X1A:	Type	NO + NC
COM, NC, NO	Max. switching voltage	250 V AC / 30 V DC
	Max. switching current	0.5 A / 30 V DC; 5 A / 230 V AC
	Max. continuous current	2 A rms
Wire size	Relay connections	1.5...0.20 mm^2 /16...24 AWG
	I/O connections	1... 0.14mm^2/16...26 AWG
Torque	Relay connections	0.5 N·m / 4.4 lbf·in
	I/O connections	0.22 N·m / 2 lbf·in

Brake resistor connection

Short-circuit protection (IEC 61800-5-1, IEC 60439-1, UL 508C)	The brake resistor output is conditionally short-circuit proof by IEC/EN 61800-5-1 and UL 508C. For correct fuse selection, contact your local ABB representative. Rated conditional short-circuit current as defined in IEC 60439-1 and the short-circuit test current by UL 508C is 100 kA.

Efficiency

Approximately 95 to 98% at nominal power level, depending on the drive size and options

Degrees of protection

IP20 (cabinet installation) / UL open: Standard enclosure. The drive must be installed in a cabinet to fulfil the requirements for shielding from contact.

IP20 / NEMA 1: Achieved with an option kit (MUL1-R1) including a hood and a connection box.

Ambient conditions

Environmental limits for the drive are given below. The drive is to be used in a heated indoor controlled environment.

	Operation installed for stationary use	**Storage** in the protective package	**Transportation** in the protective package
Installation site altitude	0 to 2000 m (6600 ft) above sea level (above 1000 m [3300 ft], see section *Derating* on page *138*)	-	-
Air temperature	-10 to +50 °C (14 to 122 °F). No frost allowed. See section *Derating* on page *138*.	-40 to +70 °C ±2% (-40 to +158 °F) ±2%	-40 to +70 °C (-40 to +158 °F)
Relative humidity	0 to 95%	Max. 95%	Max. 95%
	No condensation allowed. Maximum allowed relative humidity is 60% in the presence of corrosive gases.		
Contamination levels (IEC 60721-3-3, IEC 60721-3-2, IEC 60721-3-1)	No conductive dust allowed.		
	According to IEC 60721-3-3, chemical gases: Class 3C2 solid particles: Class 3S2. **Note:** The drive must be installed in clean air according to enclosure classification. **Note:** Cooling air must be clean, free from corrosive materials and electrically conductive dust.	According to IEC 60721-3-1, chemical gases: Class 1C2 solid particles: Class 1S2	According to IEC 60721-3-2, chemical gases: Class 2C2 solid particles: Class 2S2
Sinusoidal vibration (IEC 60721-3-3)	Tested according to IEC 60721-3-3, mechanical conditions: Class 3M4 2…9 Hz, 3.0 mm (0.12 in) 9…200 Hz, 10 m/s^2 (33 ft/s^2)	-	-
Shock (IEC 60068-2-27, ISTA 1A)	Not allowed during operation	According to ISTA 1A. Max. 100 m/s^2 (330 ft/s^2), 11 ms.	According to ISTA 1A. Max. 100 m/s^2 (330 ft/s^2), 11 ms.
Free fall	Not allowed	76 cm (30 in)	76 cm (30 in)

Materials

Drive enclosure

- PC/ABS 2 mm, PC+10%GF 2.5…3 mm and PA66+25%GF 1.5 mm, all in color NCS 1502-Y (RAL 9002 / PMS 420 C)
- hot-dip zinc coated steel sheet 1.5 mm, thickness of coating 20 micrometers
- extruded aluminium AlSi.

Package

Corrugated cardboard.

Disposal

The drive contains raw materials that should be recycled to preserve energy and natural resources. The package materials are environmentally compatible and recyclable. All metal parts can be recycled. The plastic parts can either be recycled or burned under controlled circumstances, according to local regulations. Most recyclable parts are marked with recycling marks.

If recycling is not feasible, all parts excluding electrolytic capacitors and printed circuit boards can be landfilled. The DC capacitors contain electrolyte, which is classified as hazardous waste within the EU. They must be removed and handled according to local regulations.

For further information on environmental aspects and more detailed recycling instructions, please contact your local ABB distributor.

Applicable standards

The drive complies with the following standards:

- IEC/EN 61800-5-1: 2003 — Electrical, thermal and functional safety requirements for adjustable frequency a.c. power drives
- IEC/EN 60204-1: 2006 — Safety of machinery. Electrical equipment of machines. Part 1: General requirements. *Provisions for compliance:* The final assembler of the machine is responsible for installing
  - an emergency-stop device
  - a supply disconnecting device.
- IEC/EN 61800-3: 2004 — Adjustable speed electrical power drive systems. Part 3: EMC requirements and specific test methods
- UL 508C — UL Standard for Safety, Power Conversion Equipment, third edition.

CE marking

See the type designation label for the valid markings of your drive.

A CE mark is attached to the drive to verify that the drive follows the provisions of the European Low Voltage and EMC Directives.

Compliance with the European EMC Directive

The EMC Directive defines the requirements for immunity and emissions of electrical equipment used within the European Union. The EMC product standard (EN 61800-3:2004) covers requirements stated for drives. See section *Compliance with the EN 61800-3:2004* on page *150*.

Compliance with the EN 61800-3:2004

Definitions

EMC stands for **E**lectro**m**agnetic **C**ompatibility. It is the ability of electrical/electronic equipment to operate without problems within an electromagnetic environment. Likewise, the equipment must not disturb or interfere with any other product or system within its locality.

First environment includes establishments connected to a low-voltage network which supplies buildings used for domestic purposes.

Second environment includes establishments connected to a network not directly supplying domestic premises.

Drive of category C1: drive of rated voltage less than 1000 V, intended for use in the first environment.

Drive of category C2: drive of rated voltage less than 1000 V and intended to be installed and commissioned only by a professional when used in the first environment.

Note: A professional is a person or organization having necessary skills in installing and/or commissioning power drive systems, including their EMC aspects.

Category C2 has the same EMC emission limits as the earlier class first environment restricted distribution. EMC standard IEC/EN 61800-3 does not any more restrict the distribution of the drive, but the using, installation and commissioning are defined.

Drive of category C3: drive of rated voltage less than 1000 V, intended for use in the second environment and not intended for use in the first environment.

Category C3 has the same EMC emission limits as the earlier class second environment unrestricted distribution.

Compliance

Category C1

The emission limits are complied with the following provisions:

1. The optional EMC filter is selected according to the ABB documentation and installed as specified in the EMC filter manual.
2. The motor and control cables are selected as specified in this manual.
3. The drive is installed according to the instructions given in this manual.
4. For the maximum motor cable length with 4 kHz switching frequency, see section *Motor connection data* on page *146*.

WARNING! In a domestic environment, this product may cause radio inference, in which case supplementary mitigation measures may be required.

Category C2

The emission limits are complied with the following provisions:

1. The optional EMC filter is selected according to the ABB documentation and installed as specified in the EMC filter manual.
2. The motor and control cables are selected as specified in this manual.
3. The drive is installed according to the instructions given in this manual.
4. For the maximum motor cable length with 4 kHz switching frequency, see section *Motor connection data* on page *146*.

WARNING! In a domestic environment, this product may cause radio inference, in which case supplementary mitigation measures may be required.

Category C3

The immunity performance of the drive complies with the demands of IEC/EN 61800-3, second environment (see page *150* for IEC/EN 61800-3 definitions).

The emission limits are complied with the following provisions

1. The internal EMC filter is connected (the screw at EMC is in place) or the optional EMC filter is installed.
2. The motor and control cables are selected as specified in this manual.
3. The drive is installed according to the instructions given in this manual.
4. With the internal EMC filter: motor cable length 30 m (100 ft) with 4 kHz switching frequency. For the maximum motor cable length with an optional external EMC filter, see section *Motor connection data* on page *146*.

WARNING! A drive of category C3 is not intended to be used on a low-voltage public network which supplies domestic premises. Radio frequency interference is expected if the drive is used on such a network.

Note: It is not allowed to install a drive with the internal EMC filter connected on IT (ungrounded) systems. The supply network becomes connected to ground potential through the EMC filter capacitors which may cause danger or damage the drive.

Note: It is not allowed to install a drive with the internal EMC filter connected on a corner-grounded TN system as this would damage the drive.

UL marking

See the type designation label for the valid markings of your drive.

The UL mark is attached to the drive to verify that it meets UL requirements.

UL checklist

Input power connection – See section *Electric power network specification* on page *146*.

Disconnecting device (disconnecting means) – See section *Selecting the supply disconnecting device (disconnecting means)* on page *29*.

Ambient conditions – The drives are to be used in a heated indoor controlled environment. See section *Ambient conditions* on page *149* for specific limits.

Input cable fuses – For installation in the United States, branch circuit protection must be provided in accordance with the National Electrical Code (NEC) and any applicable local codes. To fulfil this requirement, use the UL classified fuses given in section *Size of copper conductor in cablings* on page *142*.

For installation in Canada, branch circuit protection must be provided in accordance with Canadian Electrical Code and any applicable provincial codes. To fulfil this requirement, use the UL classified fuses given in section *Size of copper conductor in cablings* on page *142*.

Power cable selection – See section *Selecting the power cables* on page *30*.

Power cable connections – For the connection diagram and tightening torques, see section *Connecting the power cables* on page *41*.

Overload protection – The drive provides overload protection in accordance with the National Electrical Code (US).

Braking – The drive has an internal brake chopper. When applied with appropriately sized brake resistors, the brake chopper allows the drive to dissipate regenerative energy (normally associated with quickly decelerating a motor). Brake resistor selection is discussed in section *Brake resistors* on page *153*.

C-Tick marking

See the type designation label for the valid markings of your drive.

C-Tick marking is required in Australia and New Zealand. A C-Tick mark is attached to the drive to verify compliance with the relevant standard (IEC 61800-3 (2004) – Adjustable speed electrical power drive systems – Part 3: EMC product standard including specific test methods), mandated by the Trans-Tasman Electromagnetic Compatibility Scheme.

The Trans-Tasman Electromagnetic Compatibility Scheme (EMCS) was introduced by the Australian Communication Authority (ACA) and the Radio Spectrum Management Group (RSM) of the New Zealand Ministry of Economic Development (NZMED) in November 2001. The aim of the scheme is to protect the radio frequency spectrum by introducing technical limits for emission from electrical/electronic products.

For fulfilling the requirements of the standard, see section *Compliance with the EN 61800-3:2004* on page *150*.

RoHS marking

See the type designation label for the valid markings of your drive.

The RoHS mark is attached to the drive to verify that drive follows the provisions of the European RoHS directive. RoHS = the restriction of the use of hazardous substances in electrical and electronic equipment.

Brake resistors

ACS150 drives have an internal brake chopper as standard equipment. The brake resistor is selected using the table and equations presented in this section.

Selecting the brake resistor

1. Determine the required maximum braking power P_{Rmax} for the application. P_{Rmax} must be smaller than P_{BRmax} given in the table on page *154* for the used drive type.
2. Calculate resistance R with Equation 1.
3. Calculate energy E_{Rpulse} with Equation 2.
4. Select the resistor so that the following conditions are met:
   - The rated power of the resistor must be greater than or equal to P_{Rmax}.
   - Resistance R must be between R_{min} and R_{max} given in the table for the used drive type.
   - The resistor must be able to dissipate energy E_{Rpulse} during the braking cycle T.

Equations for selecting the resistor:

Eq. 1. $U_N = 200…240\ V$: $R = \frac{150000}{P_{Rmax}}$

$U_N = 380…415\ V$: $R = \frac{450000}{P_{Rmax}}$

$U_N = 415…480\ V$: $R = \frac{615000}{P_{Rmax}}$

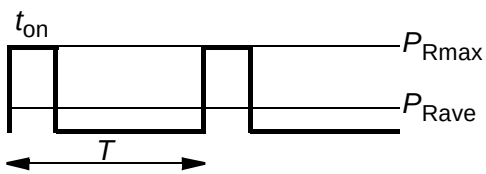

Eq. 2. $E_{Rpulse} = P_{Rmax} \cdot t_{on}$

Eq. 3. $P_{Rave} = P_{Rmax} \cdot \frac{t_{on}}{T}$

For conversion, use 1 hp = 746 W.

where
R = selected brake resistor value (ohm)
P_{Rmax} = maximum power during the braking cycle (W)
P_{Rave} = average power during the braking cycle (W)
E_{Rpulse} = energy conducted into the resistor during a single braking pulse (J)
t_{on} = length of the braking pulse (s)
T = length of the braking cycle (s).

Resistor types shown in the following table are pre-dimensioned resistors using the maximum braking power with cyclic braking shown in the table. Resistors are available from ABB. Information is subject to change without further notice.

Type ACS150-x = E/U[1]	R_{min}	R_{max}	P_{BRmax}		Selection table by resistor type			
					CBR-V			Braking time [2]
	ohm	ohm	kW	hp	160	210	460	s
1-phase U_N = 200…240 V (200, 208, 220, 230, 240 V)								
01x-02A4-2	70	390	0.37	0.5	•			90
01x-04A7-2	40	200	0.75	1	•			45
01x-06A7-2	40	130	1.1	1.5	•			28
01x-07A5-2	30	100	1.5	2	•			19
01x-09A8-2	30	70	2.2	3	•			14
3-phase U_N = 200…240 V (200, 208, 220, 230, 240 V)								
03x-02A4-2	70	390	0.37	0.5	•			90
03x-03A5-2	70	260	0.55	0.75	•			60
03x-04A7-2	40	200	0.75	1	•			42
03x-06A7-2	40	130	1.1	1.5	•			29
03x-07A5-2	30	100	1.5	2	•			19
03x-09A8-2	30	70	2.2	3	•			14
3-phase U_N = 380…480 V (380, 400, 415, 440, 460, 480 V)								
03x-01A2-4	200	1180	0.37	0.5		•		90
03x-01A9-4	175	800	0.55	0.75		•		90
03x-02A4-4	165	590	0.75	1		•		60
03x-03A3-4	150	400	1.1	1.5		•		37
03x-04A1-4	130	300	1.5	2		•		27
03x-05A6-4	100	200	2.2	3		•		17
03x-07A3-4	70	150	3.0	3			•	29
03x-08A8-4	70	110	4.0	5			•	20

[1] E=EMC filter connected (metal EMC filter screw installed), U=EMC filter disconnected (plastic EMC filter screw installed), US parametrization.

00353783.xls J

[2] Braking time = maximum allowed braking time in seconds at P_{BRmax} every 120 seconds, at 40 °C ambient temperature.

Note: The brake resistors listed in the table are available in Europe. They do not apply to the USA. Contact your local ABB representative for more information.

Symbols

R_{min} = minimum allowed brake resistor that can be connected to the brake chopper
R_{max} = maximum allowed brake resistor that allows R_{max}
P_{BRmax} = maximum braking capacity of the drive, must exceed the desired braking power.

Ratings by resistor type	CBR-V	CBR-V	CBR-V
	160	**210**	**460**
Nominal power (W)	280	360	790
Resistance (ohm)	70	200	80

WARNING! Never use a brake resistor with a resistance below the minimum value specified for the particular drive. The drive and the internal chopper are not able to handle the overcurrent caused by the low resistance.

Selecting the brake resistor cables

Use a shielded cable with the same conductor size as for drive input cabling (see section *Terminal and lead-through data for the power cables on page 145*). The maximum length of the resistor cable(s) is 5 m (16 ft).

Placing the brake resistor

Install all resistors in a place where they will cool.

WARNING! The materials near the brake resistor must be non-flammable. The surface temperature of the resistor is high. Air flowing from the resistor is of hundreds of degrees Celsius. Protect the resistor against contact.

Protecting the system in brake circuit fault situations

Protection of the system in cable and brake resistor short-circuit situations

For short-circuit protection of the brake resistor connection, see *Brake resistor connection* on page *148*. Alternatively, a two-conductor shielded cable with the same cross-sectional area can be used.

Protection of the system in brake resistor overheating situations

The following setup is essential for safety – it interrupts the main supply in fault situations involving chopper shorts:

- Equip the drive with a main contactor.
- Wire the contactor so that it opens if the resistor thermal switch opens (an overheated resistor opens the contactor).

Below is a simple wiring diagram example.

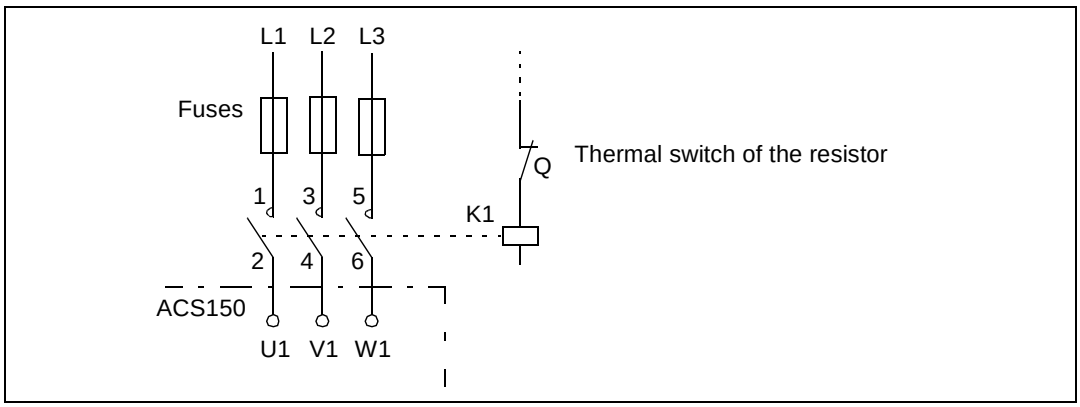

Electrical installation

For the brake resistor connections, see the power connection diagram of the drive on page *41*.

Start-up

To enable resistor braking, switch off the drive's overvoltage control by setting parameter *2005* OVERVOLT CTRL to 0 (DISABLE).

Dimension drawings

Dimensional drawings of the ACS150 are shown below. The dimensions are given in millimeters and [inches].

Frame sizes R0 and R1, IP20 (cabinet installation) / UL open

R1 and R0 are identical except for the fan at the top of R1.

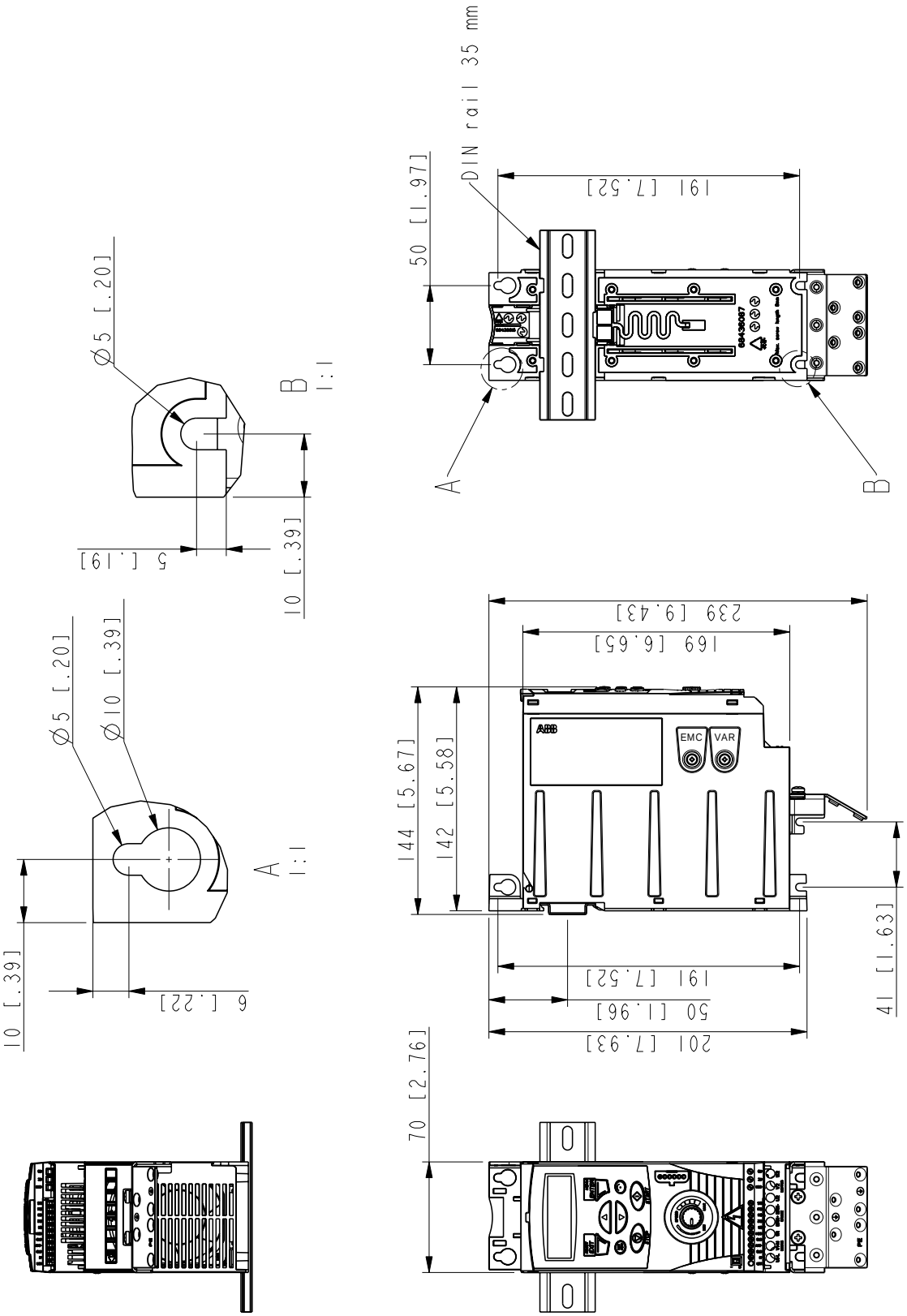

Frame sizes R0 and R1, IP20 (cabinet installation) / UL open

Frame sizes R0 and R1, IP20 / NEMA 1

R1 and R0 are identical except for the fan at the top of R1.

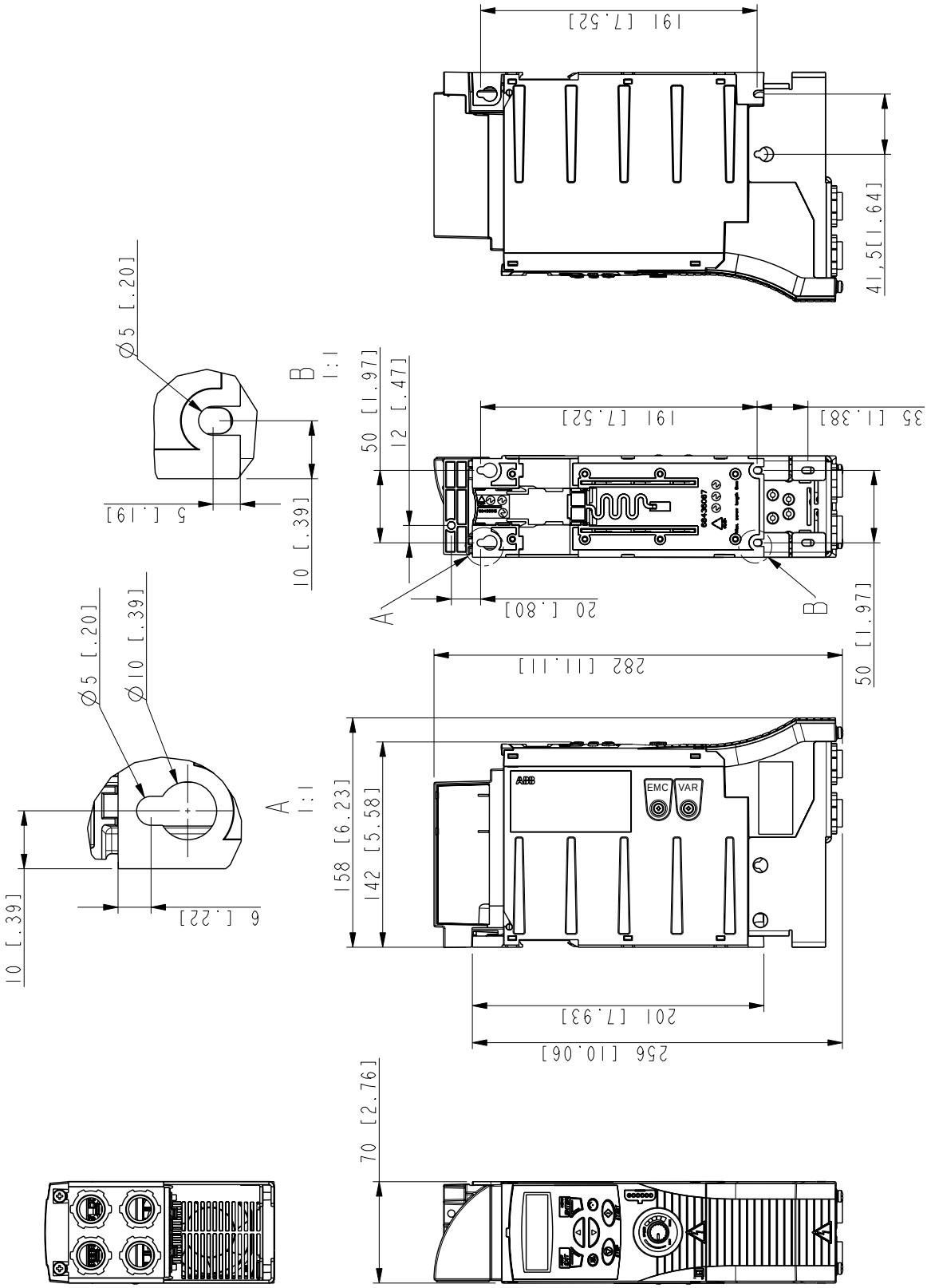

Frame sizes R0 and R1, IP20 / NEMA 1

3AFE68637929-A

Frame size R2, IP20 (cabinet installation) / UL open

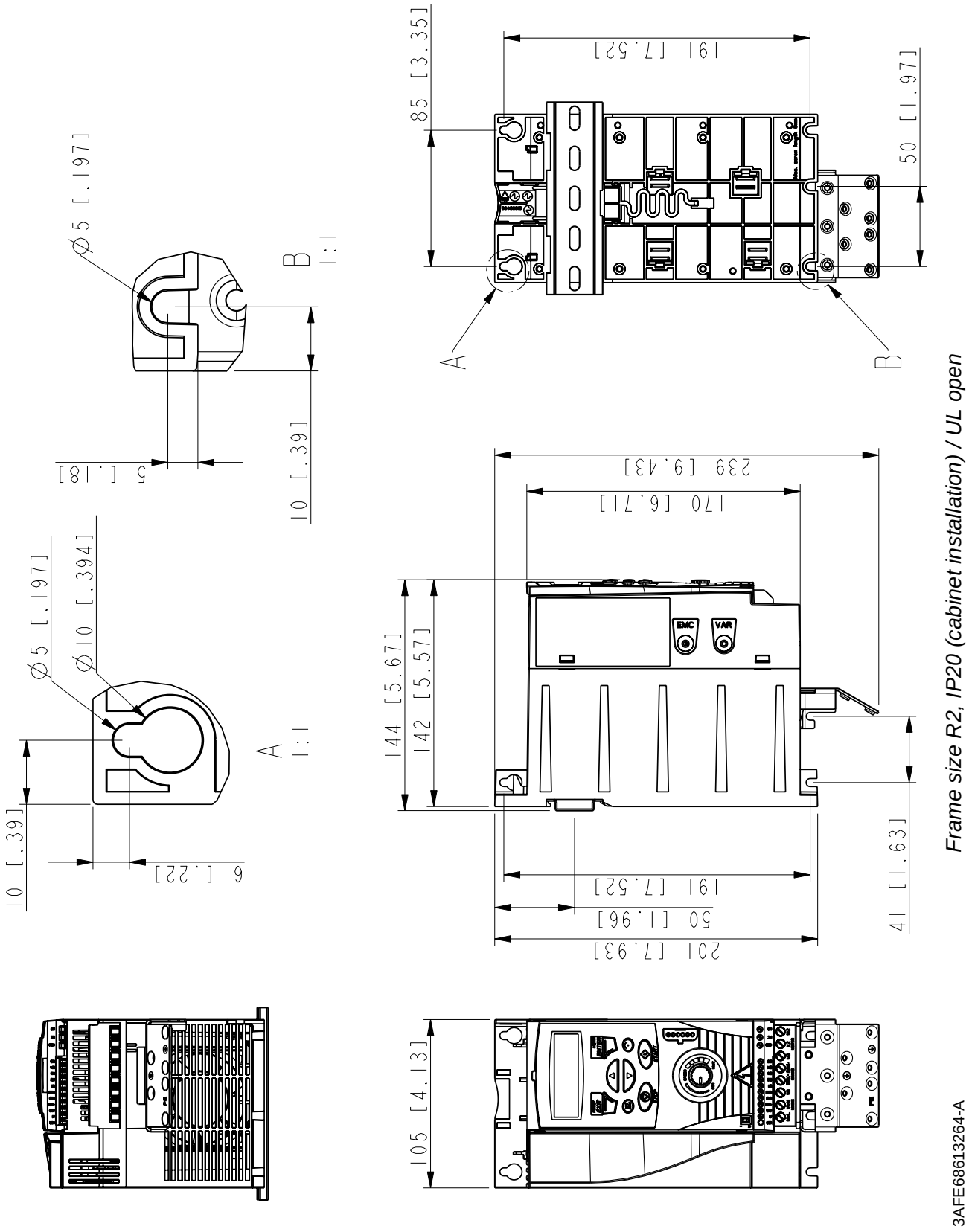

Frame size R2, IP20 (cabinet installation) / UL open

3AFE68613264-A

Frame size R2, IP20 / NEMA 1

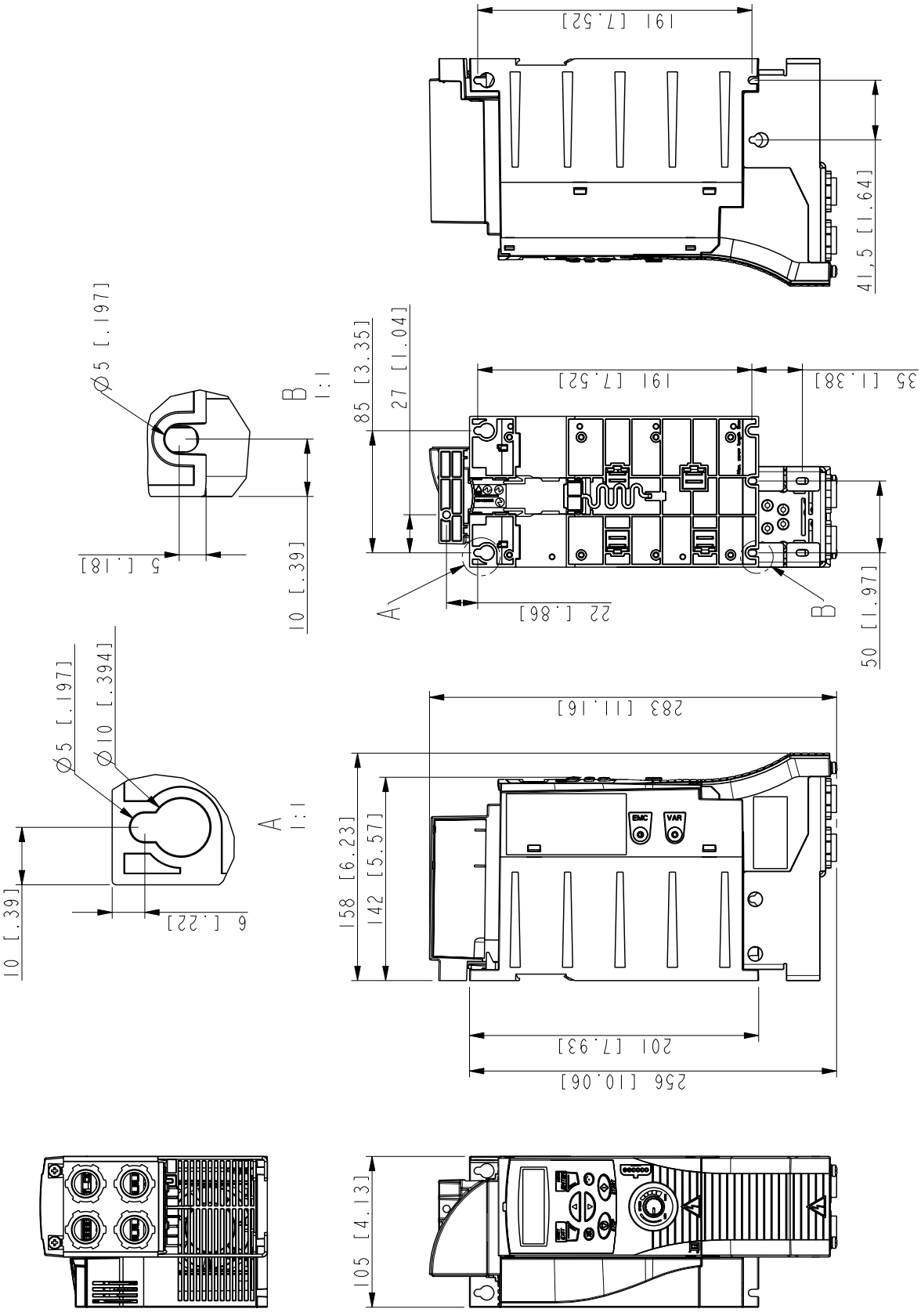

Frame size R2, IP20 / NEMA 1

3AFE68633931-A

Appendix: Process PID control

What this chapter contains

The chapter contains instructions on quick configuration of the process control, gives an application example and describes the PID sleep functionality.

Process PID control

There is a built-in PID controller in the drive. The controller can be used to control process variables such as pressure, flow or fluid level. In process PID control, a process reference (setpoint) is set with drive's integrated potentiometer. An actual value (process feedback) is connected to the drive's analog input. The process PID control adjusts the drive speed in order to keep the measured process quantity (actual value) at the desired level (setpoint).

Quick configuration of process PID control

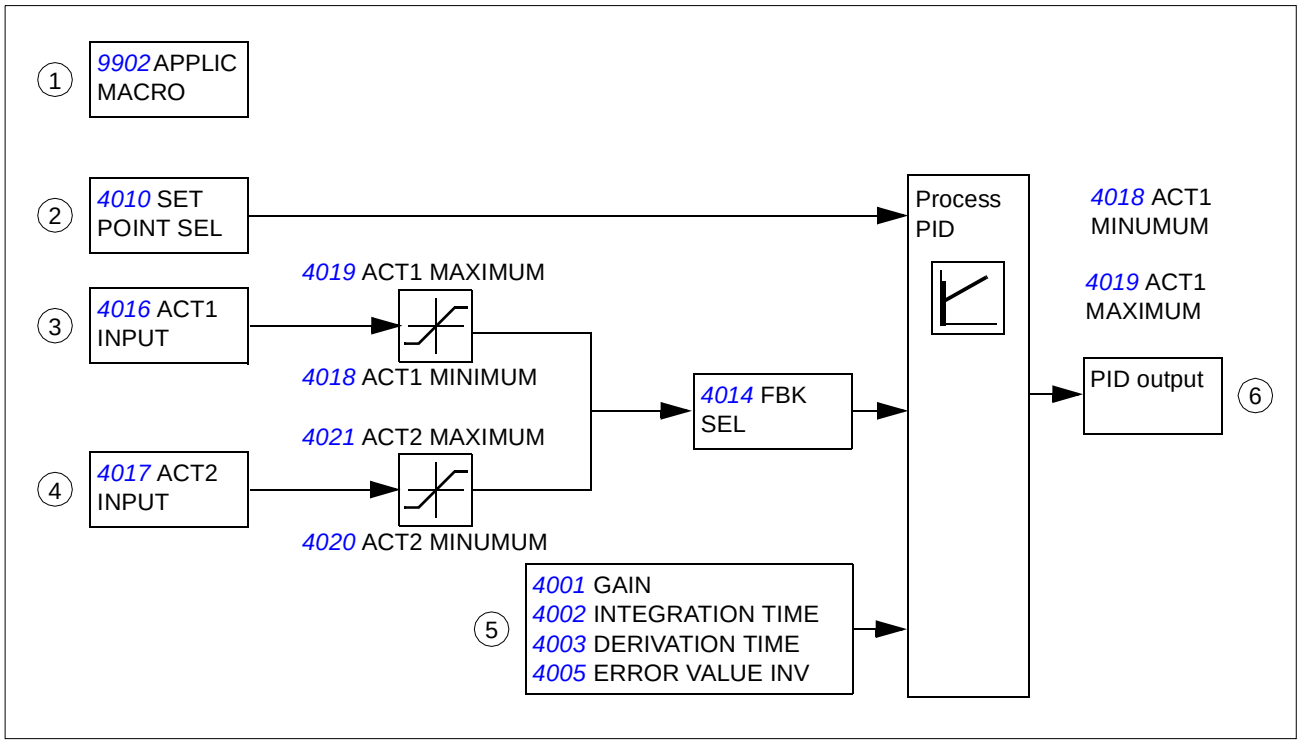

1. *9902* **APPLIC MACRO:** Set *9902* APPLICATION MACRO to 6 (PID CONTROL).
2. *4010* **SET POINT SEL:** Determine the source for the PID reference signal (PID setpoint) and define its scale (*4006* UNITS, *4007* UNIT SCALE).
3. *4014* **FBK SEL and** *4016* **ACT1 INPUT:** Select the process actual value (feedback signal) for the system and configure feedback levels (*4018* ACT1 MINUMUM, *4019* ACT1 MAXIMUM).

4. *4017* **ACT2 INPUT:** If a second feedback is used, configure also this actual value 2 (*4020* ACT2 MINIMUM and *4021* ACT2 MAXIMUM).
5. *4001* **GAIN,** *4002* **INTEGRATION TIME,** *4003* **DERIVATION TIME,** *4005* **ERROR VALUE INV:** Configure the desired gain, integration time, derivation time and error value inversion when needed.
6. **Activate PID output:** Check that *1106* REF2 SELECT is set to 19 (PID1OUT).

Pressure boost pump

The figure below shows an application example: The controller adjusts the speed of a pressure boost pump according to the measured pressure and the set pressure reference.

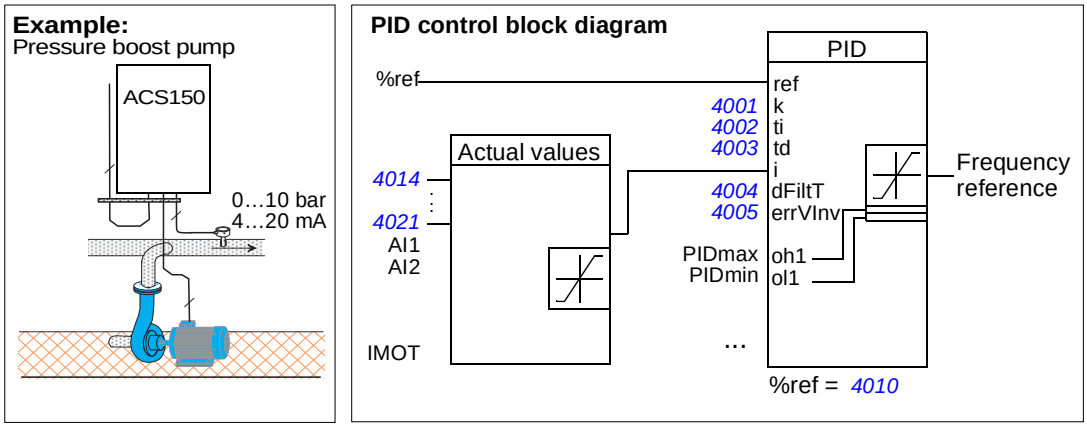

How to scale the PID actual (feedback) signal 0…10 bar / 4…20 mA

PID feedback is connected to AI1 and *4016* ACT1 INPUT is set to AI1.

1. Set *9902* APPLICATION MACRO to 6 (PID CONTROL). Check scaling: 1301 MINIMUM AI1 as default 20% and 1302 MAXIMUM AI1 as default 100%. Check that *1106* REF2 SELECT is set to 19 (PID1OUT).
2. Set *3408* SIGNAL2 PARAM to 130 (PID1 FBK).
3. Set *3409* SIGNAL2 MIN to 0.
4. Set *3410* SIGNAL2 MAX to 10.
5. Set *3411* OUTPUT2 DSP FORM to 9 (DIRECT).
6. Set *3412* OUTPUT2 UNIT to 0 (NO UNIT).
7. Set *4006* UNITS to 0 (NO UNIT).
8. Set *4007* UNIT SCALE to 1.
9. Set *4008* 0% VALUE to 0.
10. Set *4009* 100% VALUE to 10.

How to scale the PID setpoint signal

1. Set *4010* SET POINT SEL to 19 (INTERNAL).
2. Set *4011* INTERNAL SETPNT to 5.0 ("bar" is not displayed on the drive control panel) as an example.

PID sleep functionality

The block diagram below illustrates the sleep function enable/disable logic. The sleep function can be put into use only when the PID control is active.

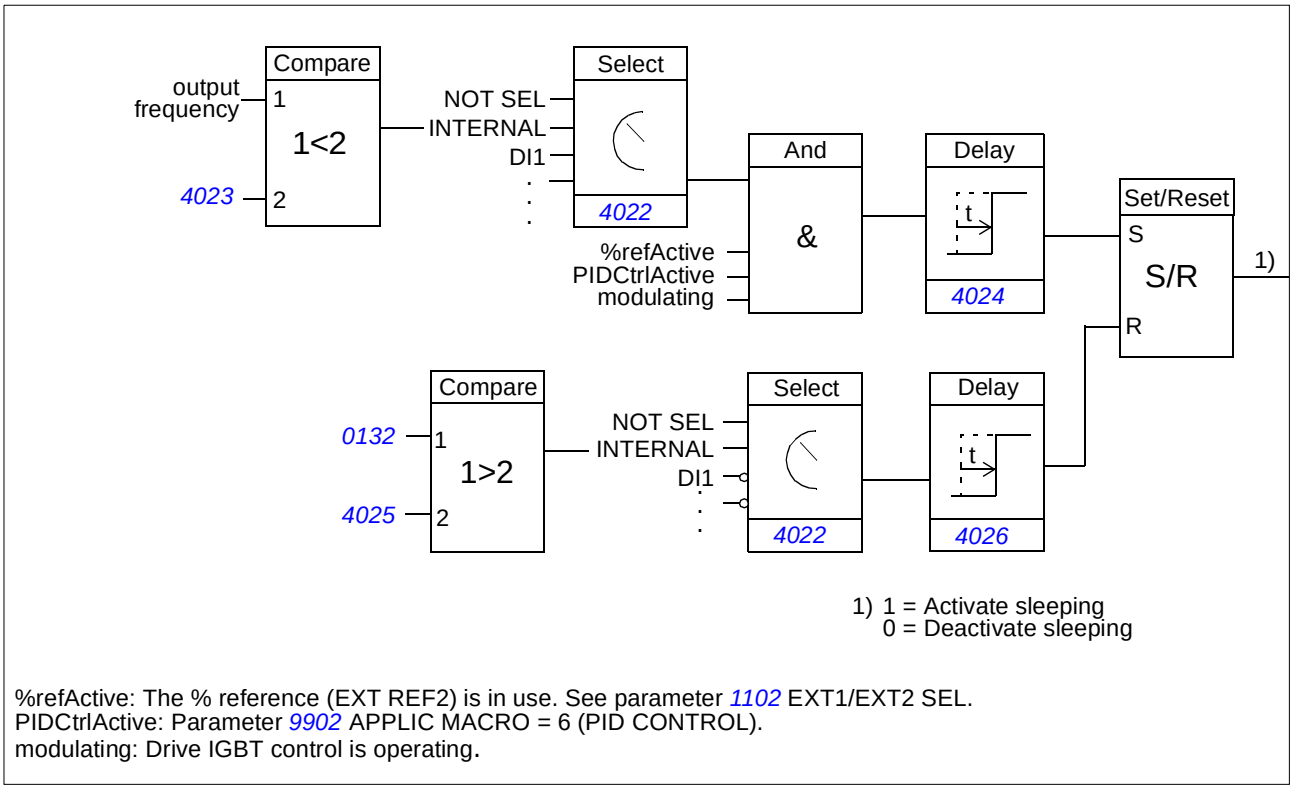

%refActive: The % reference (EXT REF2) is in use. See parameter *1102* EXT1/EXT2 SEL.
PIDCtrlActive: Parameter *9902* APPLIC MACRO = 6 (PID CONTROL).
modulating: Drive IGBT control is operating.

Example

The time scheme below visualizes the operation of the sleep function.

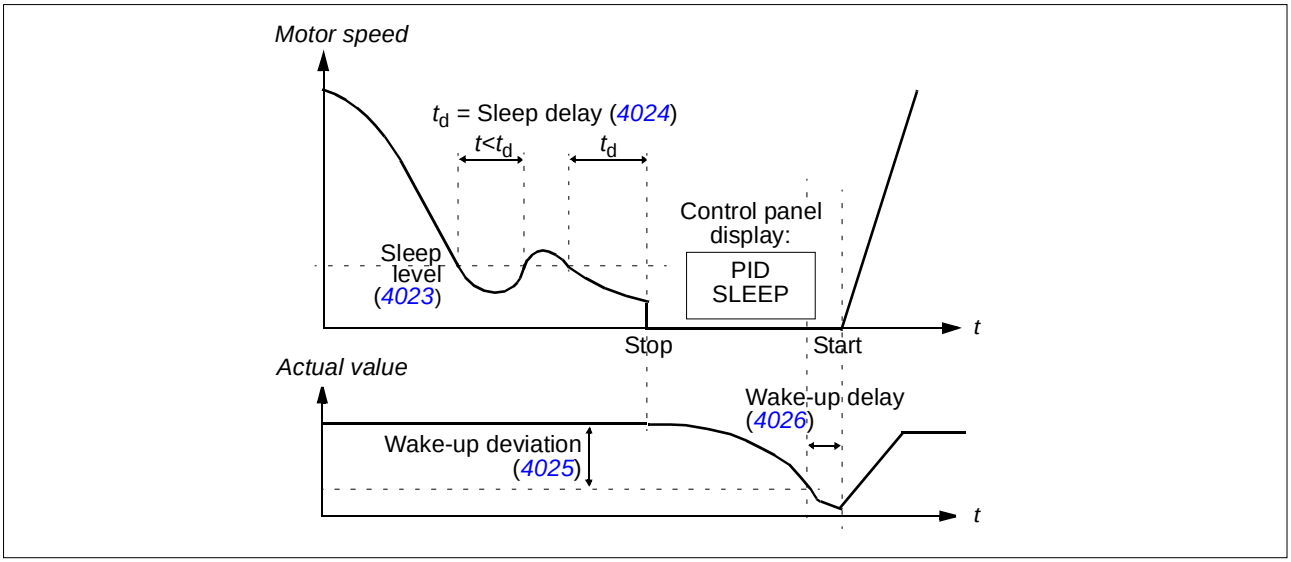

Sleep function for a PID controlled pressure boost pump (when parameter *4022* SLEEP SELECTION is set to 7 = INTERNAL): The water consumption falls at night. As a consequence, the PID process controller decreases the motor speed. However, due to natural losses in the pipes and the low efficiency of the centrifugal pump at low speeds, the motor does not stop but keeps rotating. The sleep function detects the slow rotation, and stops the unnecessary pumping after the sleep delay has passed. The drive shifts into the sleep mode, still monitoring the pressure. The pumping restarts when the pressure falls under the allowed minimum level and the wake-up delay has passed.

Settings:

Parameter	**Additional information**
9902 APPLIC MACRO	PID control activation
4022 SLEEP SELECTION	Sleep function activation and source selection
4023 PID SLEEP LEVEL	Definition of the start limit for the sleep function
4024 PID SLEEP DELAY	Definition of the delay for the sleep start function
4025 WAKE-UP DEV	Definition of the wake-up deviation for the sleep function
4026 WAKE-UP DELAY	Definition of the wake-up delay for the sleep function

Parameters:

Parameter	**Additional information**
1401 RELAY OUTPUT 1	PID sleep function status through the relay output
Alarm	**Additional information**
PID SLEEP	Sleep mode

Declaration of Incorporation

(According to Machinery Directive 2006/42/EC)

Manufacturer: ABB Oy
Address: P.O Box 184, FIN-00381 Helsinki, Finland. Street address: Hiomotie 13,

herewith declare under our sole responsibility that the frequency converters with type markings:

ACS150-...
ACS350-...
ACS355-...

are intended to be incorporated into machinery or to be assembled with other machinery to constitute machinery covered by Machinery Directive 2006/42/EC and relevant essential health and safety requirements of the Directive and its Annex I have been complied with.

The technical documentation is compiled in accordance with part B of Annex VII, the assembly instructions are prepared according Annex VI and the following harmonised European standard has been applied:

EN 60204-1:2006 + A1:2009
Safety of machinery - Electrical equipment of machines- Part 1: general requirements

and that the following technical standard have been used:

EN 60529 (1991 + corrigendum May 1993 + amendment A1:2000)
Degrees of protection provided by enclosures (IP codes)

The person authorized to compile the technical documentation:

Name: Jukka Päri
Address: P.O Box 184, FIN-00381 Helsinki

The products referred in this Declaration of Incorporation are in conformity with Low voltage directive 2006/95/EC and EMC directive 2004/108/EC. The Declaration of Conformity according to these directives is available from the manufacturer.

ABB Oy furthermore declares that it is not allowed to put the equipment into service until the machinery into which it is to be incorporated or of which it is to be a component has been found and declared to be in conformity with the provisions of the Directive 2006/42/EC and with national implementing legislation, i.e. as a whole, including the equipment referred to in this Declaration.

ABB Oy gives an undertaking to the national authorities to transmit, in response to a reasoned request by the national authorities, relevant information on the partly completed machinery. The method of transmission can be either electrical or paper format and it shall be agreed with the national authority when the information is asked. This transmission of information shall be without prejudice to the intellectual property rights of the manufacturer.

Helsinki, 29.12.2009

Panu Virolainen

Vice President
ABB Oy

Further information

Product and service inquiries

Address any inquiries about the product to your local ABB representative, quoting the type designation and serial number of the unit in question. A listing of ABB sales, support and service contacts can be found by navigating to www.abb.com/searchchannels.

Product training

For information on ABB product training, navigate to new.abb.com/services/training.

Providing feedback on ABB Drives manuals

Your comments on our manuals are welcome. Navigate to new.abb.com/drives/manuals-feedback-form.

Document library on the Internet

You can find manuals and other product documents in PDF format on the Internet at www.abb.com/drives/documents.

Contact us

www.abb.com/drives
www.abb.com/drivespartners

3AFE68576032 Rev D (EN) 2016-05-03

3AFE68576032D

Power and productivity
for a better world™